VIỆT NAM SOLAR
vietnamsolar.vn

SIGENERGY

SigenStor Neo Home

Installer Manual

Three-phase System (3.0–15.0)

Version: 01

Release date: 2026.07.22

Copyright Notice

Copyright© 2026 SigenergyTechnology Co., Ltd. All Rights Reserved.

Description in this document may contain predictive statements regarding financial and operating results, product portfolio, new technology, configurations and features of product. Several factors could cause difference between actual results and those expressed or implied in the predictive statements. Therefore, description in this document is provided for reference purpose only and constitutes neither an offer nor an acceptance. Sigenergy Technology Co., Ltd. may change the information at any time without notice.

SIGENERGY and other Sigenergy trademarks are owned by Sigenergy Technology Co., Ltd.

All trademarks and registered trademarks in this document belong to their owners.

Website | LinkedIn | YouTube

www.sigenergy.com

Contents

Revision History 05
Preface 06
Chapter 1 Safety Precautions 07
1.1 General Requirements 07
1.2 Personnel Requirements 09
1.3 Handling and Transportation Requirements 10
1.3.1 General Requirements 10
1.3.2 Battery Pack 11
1.4 Storage Requirements 13
1.5 Operation Requirements 14
1.5.1 General Requirements 14
1.5.2 Device Installation 15
1.5.3 Cable Connections 16
1.5.4 Device Maintenance and Replacement 17
Chapter 2 Introduction to Three-phase Systems 18
2.1 Device Appearance and Dimensions 18
2.2 Port Introduction 19
Chapter 3 Checks Before Installation 20
Chapter 4 Location Requirements 24
Chapter 5 Inverter and Battery Pack Installation 26
5.1 Floor Mounting 26
5.1.1 Installing the Base 26
5.1.2 Installing Battery Packs and Inverters 29
5.2 Wall Mounting 34
5.2.1 Installing the Base 34
5.2.2 Installing Battery Packs and Inverters 36
Chapter 6 Cable Connection and Component Installation 37
6.1 Connection Relationships 37
6.2 Recommended Wiring Scheme 38

6.3 Protective Chassis Grounding Cable Connection 39
6.4 DC Input Cable Connection 40
6.5 AC Output Cable Connection 41
6.6 Signal Cable Connection 42
6.6.1 COM Port Description 42
6.6.2 RS485 Signal Cable Connection 44
6.6.3 RJ45 Network Cable Connection (FE1/FE2) 45
6.6.4 CT Connection 46
6.6.5 DRM Connection 47
6.6.6 (Optional) NS Protective Device Connection 48
6.6.7 (Optional) Emergency Power Off (EPO) Button Connection 49
6.7 WLAN Antenna Installation 50
6.8 (Optional) Replacing SIM Card of Sigen CommMod 51
6.9 Sigen CommMod Installation 52
Chapter 7 Inspections After Installation 53
Chapter 8 Device Power-on 54
Chapter 9 Decorative Cover Installation 56
Chapter 10 mySigen App — Download and New System Creation 57

Revision History

Version	Date	Description
01	2026.07.22	Initial release

Preface

Overview

This document mainly introduces the SigenStor Neo Home device, covering installation and wiring.

Intended Audience

This document is intended for product users and professionals.

Icon Definition

The following icons may be used in the document to indicate safety precautions or key information. Before installation and operation, please be familiar with and master the icons and the corresponding definitions.

Icon	Definition
Danger	Danger. Indicates an imminently hazardous situation which, if not avoided, will result in death or serious personal injury.
Warning	Warning. Indicates a potentially hazardous situation which, if not avoided, will result in serious personal injury or property damage.
Caution	Caution. Indicates a potentially hazardous situation which, if not avoided, will result in property damage.
Tips	Indicates important or key information and provides operation tips.

Chapter 1 Safety Precautions

Caution

- Only trained or qualified persons with electrical engineering knowledge can work directly on the device.
- Operators should be familiar with national and local laws, regulations, and standards, and the compositions and operating principles of relevant systems.
- Before operations, please carefully read operating requirements and important notice in this document. Any device damage caused by improper operation will not be covered under warranty.
- Before operating, determine whether the owner plans future expansions (e.g., adding battery packs). If so, reserve 300 mm (11.81 in) of cable for each additional battery pack.

1.1 General Requirements

Before installation, operation, and maintenance of the device, familiarize yourself with this document.
The "Caution," "Warning," and "Danger" statements described in this manual are only supplementary precautions to all safety notices.
Our company is not liable for device damage or property loss caused by the following reasons:

- The installation environment does not comply with relevant international, national, or regional standards.
- Failure to comply with local laws and regulations during the transportation, installation, operation, and maintenance of the device.
- The installation area does not meet the requirements of the device.
- Cables, tools, and other materials used do not comply with relevant international, national, or regional standards.
- Damage caused by storage conditions that do not meet the requirements of the device.
- Failure to operate according to the instructions and precautions in the manual.
- Failure to handle the device with care or violent installation may result in device damage and liquid leakage and pose a risk of fire or explosion hazards.
- Failure to follow the operational requirements indicated on warning labels on the device or tools.
- Negligence, improper operation, or deliberate damage.
- Loss of battery pack capacity or irreversible damage caused by the customer's failure to charge the device in a timely manner.
- Damage caused by the customer or a third-party company through the improper use of our company's device (for example, mixing our company's battery pack with other battery packs, or using our company's battery pack with inverters or converters from other brands).

- The device is damaged because the customer or a third-party company fails to use the accessories supplied with the packing box or purchase and install accessories of the same specifications.
- Device damage caused by unauthorized disassembly or replacement of the device or modification of software code, or other improper operations.
- Device damage caused by force majeure (such as war, earthquake, fire, storms, lightning, floods, and debris flow).
- Damage caused by the failure of the natural environment or external power parameters to meet the standard requirements for the normal operation of the device. For example, the actual operating temperature of the device is too high or too low.
- The device was stolen.
- The device is damaged after the warranty period expires.

1.2 Personnel Requirements

Personnel responsible for installation and maintenance of the device must be properly trained and obtain relevant certificates, be familiar with local laws, regulations, and relevant standards, understand the composition and working principles of the power generation system, be aware of all safety precautions, master the established operation procedures, and hold the qualifications required by local authorities.

1.3 Handling and Transportation Requirements

1.3.1 General Requirements

- Wear personal protective equipment such as protective gloves and safety shoes while handling the device.
- Select an appropriate handling method according to the device weight.
- When handling the device, always follow the package orientation marking. Do not tilt or place the device upside down.
- The tilt angle of the device with packaging must be less than or equal to 15°. After the device is unpacked, its tilt angle must be less than or equal to 10°. Take into account the heights of persons assigned to handle the device to ensure that the device is handled stably.
- Lift or move the device slowly to avoid personal injury.
- When using a forklift, position the forks so that the center of gravity of the device is aligned and secure the device as needed. Designate a person to keep an eye on the handling. Do not stand under the forks.
- Please place the device according to the stacking requirements indicated on the packaging, and secure it tightly when stacking.
- Ensure the device is placed on a flat and stable surface during transport. Do not tilt or place the device upside down.
- Transport the device with proper protective measures to avoid exposure to rain or water.

1.3.2 Battery Pack

Caution

- Do not use the device if it has been dropped, mechanically impacted, submerged, or water-soaked.
- If the device has been exposed to rain or snow, have it inspected by a professional before reuse.

Tips

The device is classified as Class 9 hazardous material and has passed UN38.3 (UN38.3: Section 38.3 of the sixth Revised Edition of the Recommendations on the Transport of Dangerous Goods: Manual of Tests and Criteria and SN/T 0370.2-2009 "Inspection Procedures for Packaging of Export Dangerous Goods — Part 2: Performance Inspection."

Loading and Unloading Requirements

Load and unload the device in accordance with local laws and industry standards. Do not handle it roughly. Handle it with care; otherwise, it may cause the device to rupture, leak, catch fire, or explode, etc.

Transport Preparation Standards

- Before transport, confirm that the device packaging is intact and undamaged, and that there are no obvious odors, smoke, or fire; otherwise, do not transport.
- Before transport, ensure the device is placed securely and protected against moisture.
- Do not transport the device in the same vehicle or container as ordinary items such as food, medicines, or animal feed.
- If the device must be transported together with ordinary items, take the following measures:
  - Maintain a clearance of ≥ 0.8 m (2.62 ft) between ordinary items and the device on all sides.
  - Use a barrier equal in height to the device package to separate them.
- Do not transport the device in the same vehicle or container with flammable, explosive, or corrosive goods.

Transport Requirements

- Comply with international dangerous-goods transport regulations and with the regulatory requirements of the transport authorities in the country of origin, transit, and destination.
- Rail and air transport are prohibited.
- For sea transport, comply with the transport requirements of the International Maritime Dangerous Goods (IMDG) Code.
- For land transport, comply with the transport requirements of the European Agreement concerning the International Carriage of Dangerous Goods by Road (ADR) or the Regulations for Road Transport of Dangerous Goods (JT/T 617).

- Sea transport is recommended, or choose roads in good condition. During transport, minimize jolting or tilting as much as possible.

1.4 Storage Requirements

- The storage location must comply with local laws and regulations.
- Do not store the device without packaging.
- Do not mix battery packs with other items. The battery pack storage location must be equipped with fire extinguishers and other firefighting facilities that meet the requirements.
- Do not expose the device to direct sunlight, humidity, condensation, dirt, rain, or a flammable, explosive, or corrosive environment.
- Take measures to prevent pests and rodents in the storage area.
- Store the device according to the storage requirements indicated on the packaging.
- Regularly record the temperature, humidity, and other conditions of the storage environment during the storage period.
  - Storage temperature: -25°C to 60°C (-13°F to 140°F), recommended 20°C to 30°C (68°F to 86°F).
  - Relative humidity: 5% RH to 95% RH. If the battery pack interface is wet or has condensation, do not install or use it.
- Before storing the battery pack, confirm that its SOC is 40% ± 5%.
- During battery pack storage, warehouse managers must count and report inventory monthly. As the recharge interval approaches, promptly schedule a recharge.

Storage Temperature Requirements	Actual Storage Temperature	Recharge Cycle
-25°C < T ≤ 60°C (-13°F to 140°F)	T ≤ -25°C (-13°F)	Not allowed
	-25°C (-13°F) < T ≤ 25°C (77°F)	15 months
	25°C (77°F) < T ≤ 35°C (95°F)	9 months
	35°C (95°F) < T ≤ 60°C (140°F)	6 months
	T > 60°C (140°F)	Not allowed

- Battery pack storage time is calculated from the shipment date on the outer packaging; after a qualified recharge, update the most recent charge date (recommended to record as YYYY/MM/DD).
- Storing battery packs beyond the recommended storage period is not recommended. When stored at the recommended storage temperature, the irreversible capacity loss after the first year (12 months) is typically 3% to 10%. If battery packs are stored beyond the recommended storage period, they must be inspected and tested by qualified professionals before being put into service.
- Follow the First-in First-out (FIFO) principle for shipment.

1.5 Operation Requirements

1.5.1 General Requirements

Danger

High voltage and hazards:

- Do not perform operations on the live devices (including but not limited to installation, wiring, and replacement). Before operation, please make sure all power supplies to the device have been disconnected, including but not limited to the grid side, inverter, and diesel generator power switches.
- Do not touch the battery pack connectors with sharp objects.
- Do not operate the device in bad weather conditions, including but not limited to lightning, rain, snow, or typhoon.
- Do not clean or soak the device with water, alcohol, oil, or other liquids to prevent leakage current or battery pack leakage.
- Do not impact, drag, or step on the device.
- Before operating the device, check whether the device is damaged. Do not perform any operations on the device in case of any abnormalities such as appearance deformation or odor.
- Wear personal protective equipment such as insulating gloves, insulating shoes, and safety hats while operating the device. Do not wear conductive accessories such as metal bracelets, rings, or necklaces.
- Use insulated tools when installing or wiring.
- Device that must be grounded is permanently connected to the PGND. Connect the protective ground cable in the first step before connecting cables. When replacing a device, remove the protective ground cable in the last step.
- Measure the voltage of the contact before touching a terminal to avoid the risk of electric shock.
- Prevent foreign objects from falling into the device while operating the equipment.

Caution

Touch up paint scratches on the surface of the device. Damage to the device, such as rust, caused by failure to touch up the paint promptly is not covered by our company's warranty.

1.5.2 Device Installation

Warning

- Get well prepared for the bearing load when handling the device to prevent it from falling and causing injury.
- Do not use the battery pack after it has sustained a drop or mechanical impact.

Ladder Safety

- Do not use ladders if you are not well-trained or instructed.
- Do not use unqualified ladders, including but not limited to damaged, broken, deformed, or temporary ladders.
- Do not use a ladder that does not meet the load-bearing requirements.
- Use wooden or fiberglass ladders when you climb up for electrical operations.
- A straight ladder must be set at a gradient of 60° to 70°.
- Do not throw objects from heights when operating on a ladder.
- We recommend that you designate a person to monitor when operating on a ladder.
- Lock the door when using a ladder at the entrance of the passageway.

Drilling Safety

- Do not drill holes on the device.
- Wear safety goggles and protective gloves when drilling holes.
- Do not place the device near drilling positions to prevent debris from falling into the device.
- Clean up any debris promptly after drilling.

1.5.3 Cable Connections

Danger

- Before connecting cables, ensure that the device is not damaged.
- Before connecting or removing cables, ensure that the upstream and downstream switches of the device and the switches on the device are turned off.

- Do not intertwine cables or route cables across each other. It is recommended that cables be bundled by category.
- Do not use cables with damaged insulation. No sharp edges or burrs are allowed in cable holes.
- Keep cables away from the heat source to prevent cable aging at high-temperatures.
- The lower the ambient temperature is, the more brittle the cable plastic sheath becomes. To prevent sheath cracking during installation, install cables at temperatures above 0°C (32 °F) and handle them with caution. If cables have been stored in an environment below 0°C (32°F) for an extended period of time, move cables to an environment above 0°C (32°F) for at least 24 hours before using them.

1.5.4 Device Maintenance and Replacement

- Before maintaining or replacing the device, power it off and wait for the delay time as indicated on its label. Power on and put the device back into operation only if troubleshooting or replacement is completed.
- Battery energy storage systems have a high fire risk, and faulty battery packs may release flammable and toxic gases. Battery pack replacement must be performed or supervised only by professionals trained in the relevant hazards and preventive measures.
- When replacing the battery pack, use our company's battery pack. Do not mix batteries from different brands.
- When a battery pack is faulty, the surface temperature may be very high; do not touch it with bare hands.
- Do not store faulty battery packs in flammable or explosive environments, and do not allow untrained personnel to approach.
- During storage of a faulty battery pack, regular monitoring should be performed to ensure there are no signs of electrolyte leakage, abnormal heating, smoke, or flame.

Chapter 2 Introduction to Three-phase Systems

For system wiring of three-phase systems, refer to System Wiring Introduction.

2.1 Device Appearance and Dimensions

Tips

- The appearance is shown with a configuration of three SigenStor Neo BAT units as an example.
- The overall thickness of the inverter is 240 mm (9.45 in), including cooling fins.

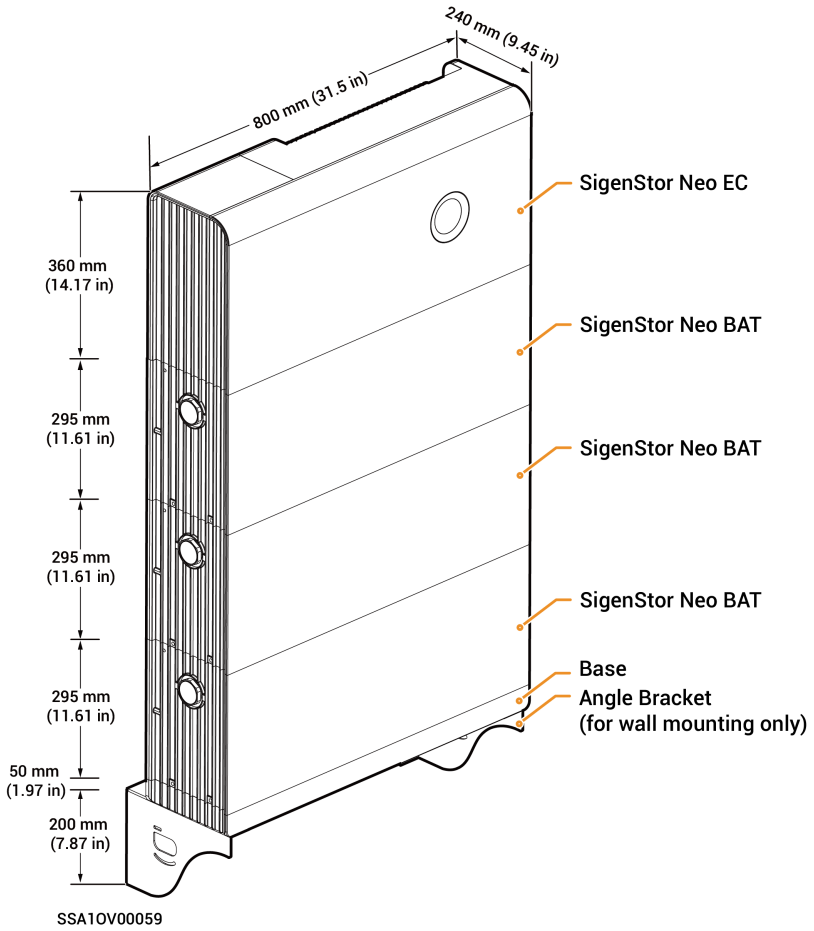

2.2 Port Introduction

Left View of SigenStor Neo EC

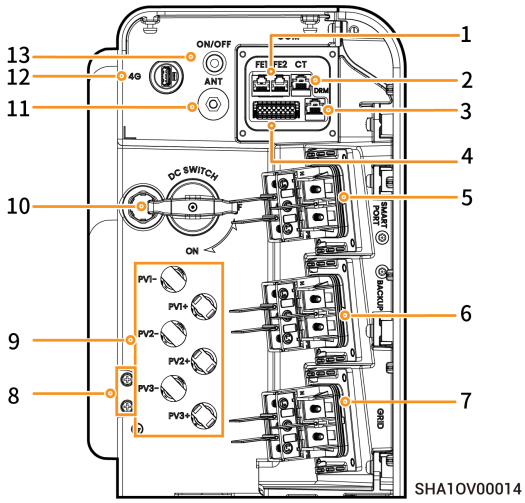

No.	Marking	Name
1	FE 1/ FE 2	Network cable interface
2	CT	CT sensor port
3	DRM	DRM
4	-	RS485 communication interface
5	SMART PORT	Smart port
6	BACKUP	Backup power port
7	GRID	AC port
8	⏚	Grounding
9	PV1+/PV2+/PV3+/PV1-/PV2-/PV3-	DC input interface
10	DC SWITCH	DC switch
11	ANT	Antenna interface
12	4G	CommMod interface
13	ON/OFF	Black start button

Chapter 3 Checks Before Installation

- Check whether the components are entirely supplied against the packing list and whether the appearance is in good condition. For any problem, contact your sales representative.
- Components and accessories supplied with the packing box are personal assets of the owner and must not be taken away from the installation site.
- Check and ensure the completeness of personal protective equipment and installation tools; replenish if necessary.
- Check and ensure the correctness of quantity and specifications of the installer-provided cables; re-prepare if necessary.

Personal Protective Equipment

Safety hat

Goggles

Dust mask

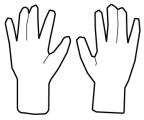
Protective gloves

Insulating gloves

Insulating shoes

Installation Tools

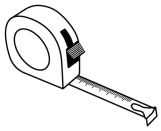
Tape measure

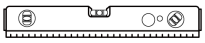
Level

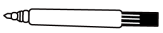
Marker

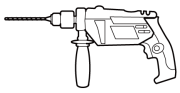
Power drill

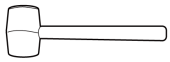
Rubber mallet

Crimping pliers

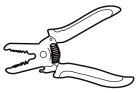
Wire stripper

Scissors

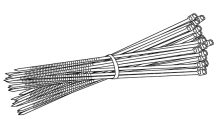
Cable ties

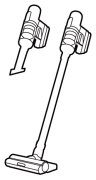
Vacuum cleaner

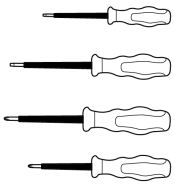

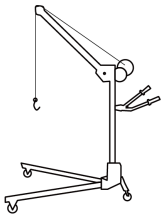

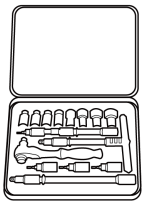

Insulated screwdriver set

(Optional) Crane (used when SigenStor Neo BATs ≥ 3 units)

(Optional) stainless steel plastic-covered wire rope (load capacity: ≥ 250 kg (551.16 lb), diameter: 3 mm (0.12 in))

Insulated sleeve set (including T25 Torx recess)

Torque socket wrench

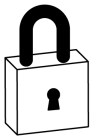

(Optional) Lock (lock rod diameter ≤ 5 mm (0.20 in))

Digital torque open-end wrench

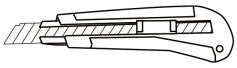

Utility knife

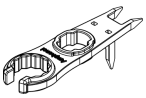

Open-end wrench (Model: H4TW0009 Supplier: Amphenol)

Crimping pliers (Model: H4TC0003 Supplier: Amphenol)

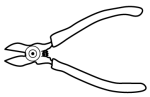

Wire cutter

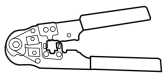

Network cable pliers

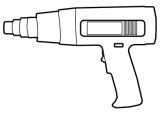

Heat gun

Heat shrinkable sleeve

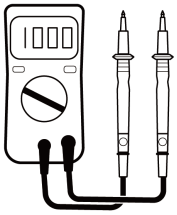

Multimeter

Installer-provided Cables

Caution

- The installer-provided wire specifications shall conform to the regulations and standards on cables in the countries/regions where they are located.
- When the inverter is connected to other device, L1, L2, L3, N, and PE must be connected in sequence, and cannot be mixed.

No.	Cable Name	Recommended Specification
1	Protective chassis grounding cable	Outdoor single-core copper flex cable Conductor cross-sectional area: 16 mm² (5 AWG)

No.	Cable Name	Recommended Specification
2	AC cable	Outdoor five-core copper flex cable (L1, L2, L3, N, PE) Conductor cross-sectional area: 16 mm² (5 AWG) Outer diameter: 22 mm to 26 mm (0.87 in to 1.02 in) **Tips** If you choose a cable with a conductor cross-sectional area of 10 mm² (7 AWG), the corresponding outer diameter is 18 mm to 21 mm (0.71 in to 0.83 in), and the AC current is ≤ 45 A. Use M5 OT/DT terminals. Specifications are as follows: 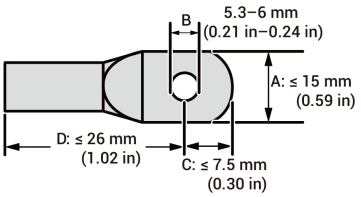
3	Signal cable	Outdoor two-core shielded twisted pair network cable ● Conductor cross-sectional area: □ 0.5 mm² to 0.75 mm² (20 AWG to 18 AWG): multi-core flex conductor; use tubular terminals □ 0.5 mm² to 1 mm² (20 AWG to 17 AWG): single-strand solid conductor; tubular terminal not required ● Outer diameter: 4.5 mm to 6.5 mm (0.18 in to 0.26 in) ● Cable length: ≤1000 m (3280.84 ft) ● Baud rate: ≤ 9600 bps
4	RJ45 network cable	Outdoor eight-core shielded twisted pair network cable ● Conductor cross-sectional area: 0.13 mm² to 0.20 mm² (26 AWG to 24 AWG) ● Outer diameter: 4 mm to 7.5 mm (0.16 in to 0.30 in) ● Single cable length: ≤ 100 m (328.08 ft)[1] ● CT network extension cord length is recommended 11 m (36.09 ft), maximum 20 m (65.62 ft)[1]
5	DC input cable	Outdoor PV cable Conductor cross-sectional area: 4 mm² to 6 mm² (11 AWG to 9 AWG) Outer diameter: 4.5 mm to 7.8 mm (0.18 in to 0.31 in)

Note [1]: The cable length should be limited for good communication. Too long cable degrades the communication effect.

Tips

For the recommended cable specifications and detailed wiring steps for cables connecting the power sensor to the household distribution panel and to the grid, please refer to the documentation included in the package for the corresponding model.

Chapter 4 Location Requirements

Tips

- Before installing the device, be sure to read the following installation requirements carefully. Our company shall not be held liable for any device malfunction, damage, or personal injury occurring during operation due to failure to follow operational requirements.
- During actual installation, the selection of the installation location should comply with local regulations, firefighting regulations, and other relevant laws. The specific installation location planning should be subject to the installer or engineering, procurement, and construction (EPC) contracts.

Installation Environment

- Do not install the device in a smoky, flammable, or explosive environment.
- Do not install the device in an environment with conductive metal dust or magnetic dust. Do not install the device in an environment that is prone to mold and fungi.
- Avoid exposing the device to direct sunlight, rain, standing water, snow, or dust. Install the device in a sheltered place. Take preventive measures in operating areas prone to natural disasters such as floods, mudslides, earthquakes, and typhoons.
- Do not install the device in an environment with strong electromagnetic interference (EMI).
- The temperature and humidity of the installation environment should meet device requirements.
- The device shall be installed in an area at least 500 m (1640.42 ft) away from corrosion sources such as high salt or high acidity (corrosion sources include but are not limited to seaside, thermal power plant, chemical plant, smelter, coal plant, rubber plant, and electroplating plant).
- In areas with good marine environments, such as Norway, where the nearshore salinity is ≤ 28 psu, the mounting distance of the device from the coastline can be appropriately relaxed to ≥ 200 m (656.17 ft).
- If the outer surface of the device is damaged, please repaint the device in time.

Installation Location

- Do not tilt the device or place it upside down. Ensure that the device is horizontally installed.
- Do not install the device in a place with fire hazards or is prone to moisturizing.
- Do not install the device in areas easily accessible to children.
- The device produces sound when it is operating. Please install the device in a place with appropriate distance at which there is no impact to daily work and life.
- Do not install the device in locations that are sealed, poorly ventilated, lacking fire protection measures, or difficult for firefighters to access.

- The device is hot when it is operating. If the device is installed indoors, please ensure good indoor ventilation and avoid significant indoor temperature rise by more than 3°C (5.4°F) while the device is operating. Otherwise, the device will be derated.
- Do not install the device in mobile scenarios such as recreational vehicles, cruise ships, and trains.
- You are advised to install the device in a location where you can easily access, install, operate, maintain it, and view the indicator status. Keep the device clear of vehicle passage when installed in a garage to avoid collisions.

Installation Base

- Do not install the device on a flammable base.
- The installation base should meet the load-bearing requirement. Solid brick-concrete structures, concrete walls, and floors are recommended.
- The installation base should be flat, and the installation area should meet the installation space requirements.
- No plumbing or electricity routing should be inside the installation base to avoid potential drilling hazards during device installation.
- The device base is made of aluminum. Suppose the device is installed on a metal base that is prone to electrochemical corrosion (such as high-chromium stainless steel, austenitic stainless steel, nickel-plated steel, etc.). In that case, insulation pads must be placed between the device and the base. (such as non-metallic PC insulation pads, PTFE insulation pads, PVDF insulation pads, etc.)

Tips

The illustration shows the recommended installation distances between the device and obstacles. If the distance is less than shown, maintenance may be inconvenient or heat dissipation may be inadequate, which can lead to degraded product performance.

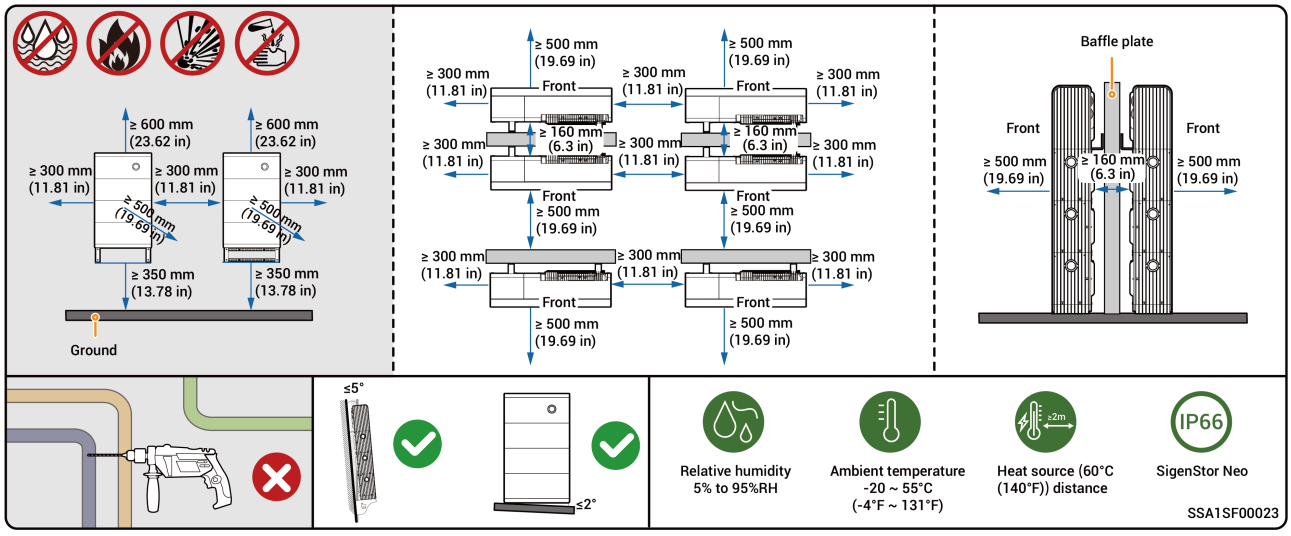

Chapter 5 Inverter and Battery Pack Installation

Tips

- Floor mounting supports up to 6 SigenStor Neo BAT units. If installing more than 3 SigenStor Neo BAT units, use a crane.
- Wall mounting supports up to 3 SigenStor Neo BAT units.
- You can install multiple SigenStor Neo BAT units on site according to the actual configuration.
- If the ground is prone to standing water, construct a waterproof platform or opt for wall mounting.

Caution

- The equipment is heavy. Handle the equipment with due care to avoid falling or injuring the operator.
- Do not use the SigenStor Neo BAT after it falls, please purchase a new one.
- During the installation process, avoid rain, snow, wind, sand, and other foreign objects from entering the device port.
- Do not drag the equipment during installation.

5.1 Floor Mounting

5.1.1 Installing the Base

Tips

- If the ground is uneven, leveling plates or adjustable feet can be used for leveling, depending on the product received.
- If the installation package the owner receives contains no adjustable feet, only leveling plates can be used for leveling. If both are available, either leveling tool can be used. Please install the device according to the actual needs of the owner.
- Please avoid using adjustable feet for leveling in earthquake-prone areas.

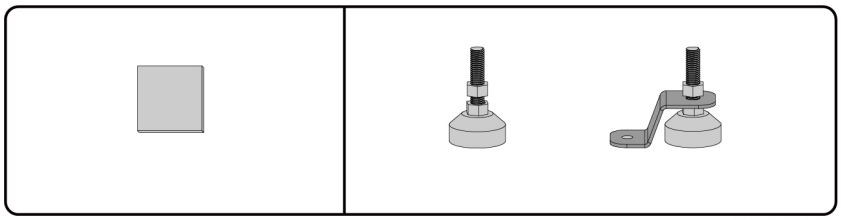

SSA10V00034

Leveling and Installing the Base with Leveling Plates

Solid Brick, Concrete, or Other Wall Scenarios

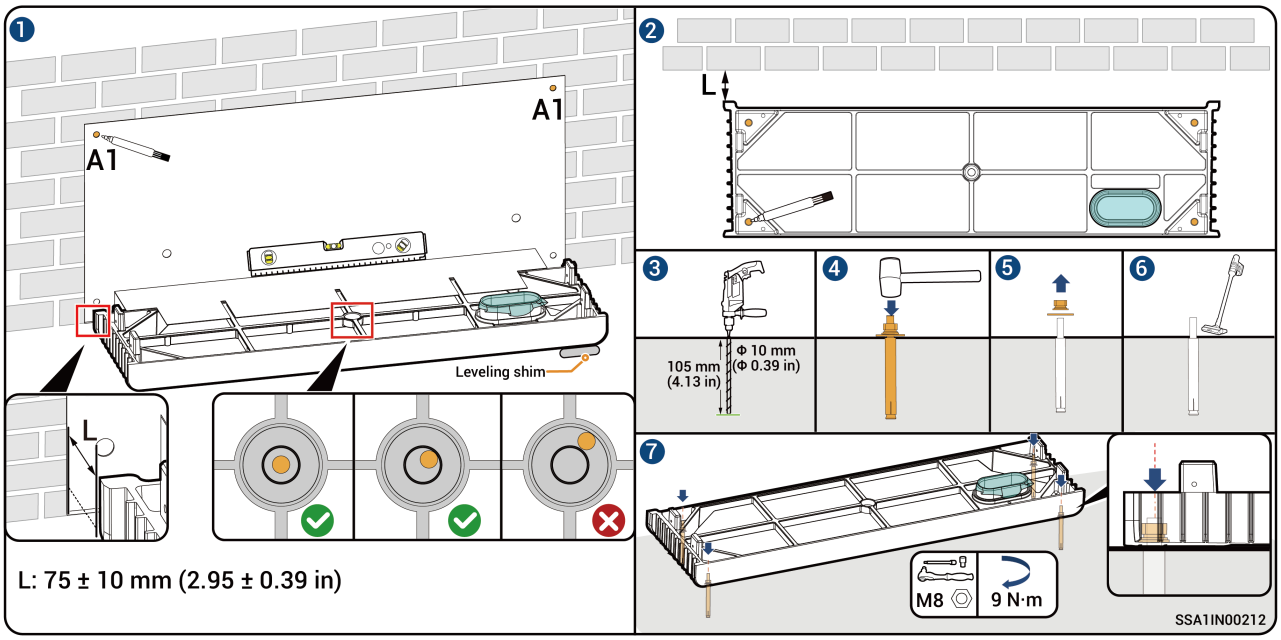

Wooden Wall Scenario

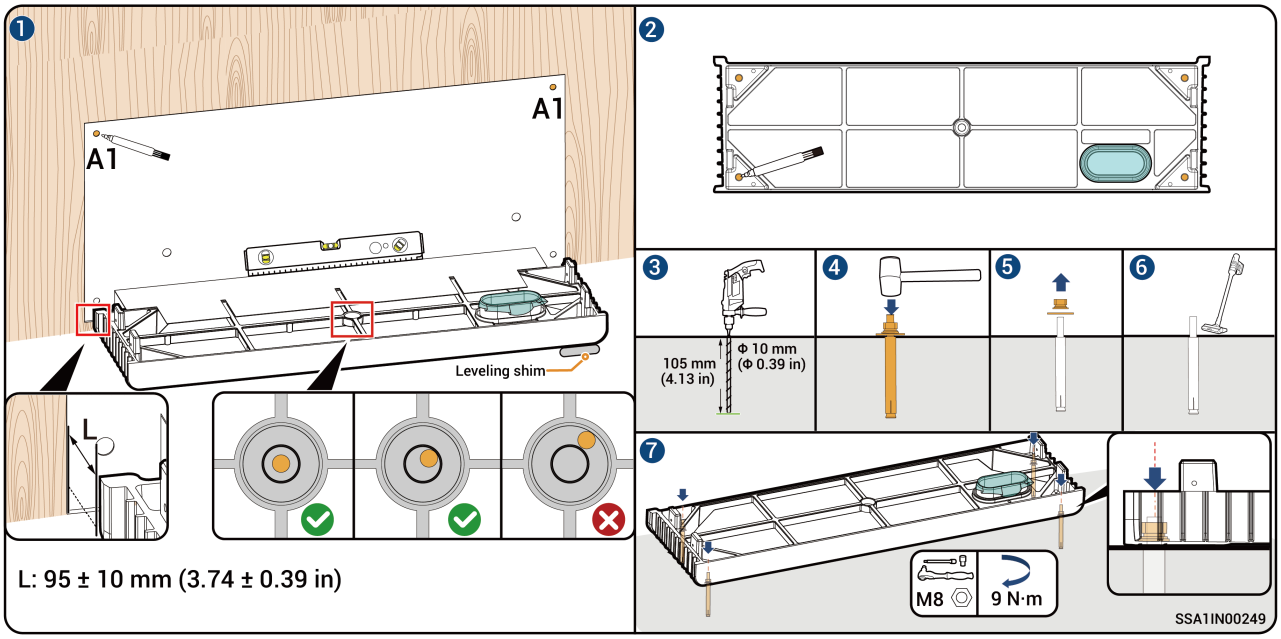

Leveling and Installing the Base with Adjustable Feet

Solid Brick, Concrete, or Other Wall Scenarios

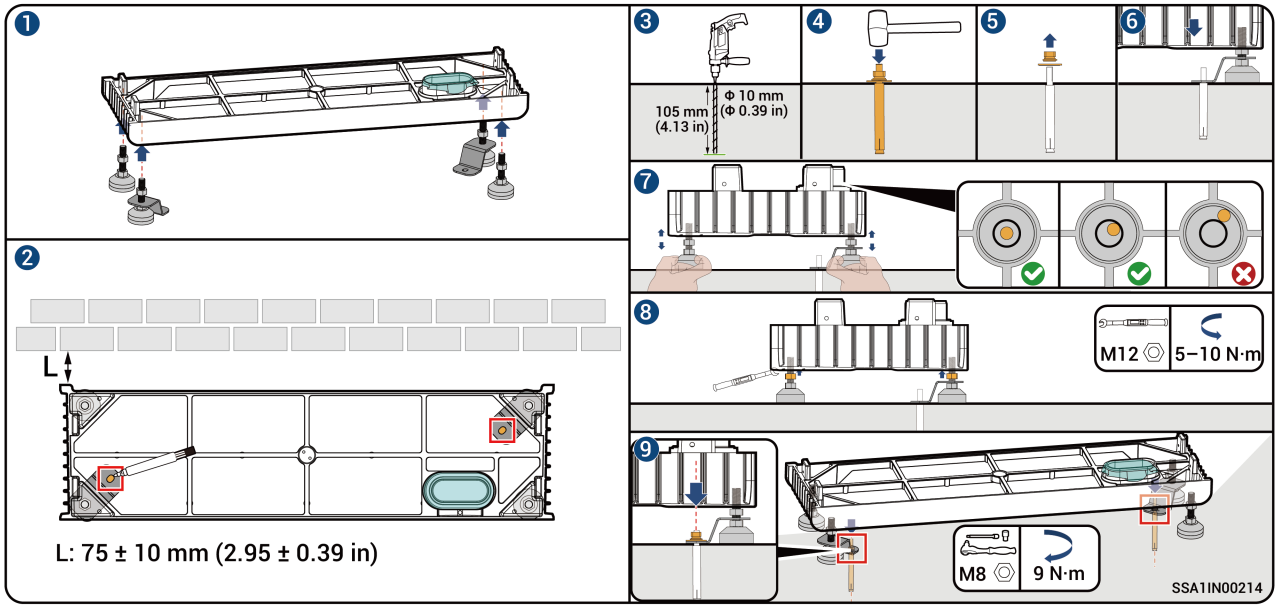

Wooden Wall Scenario

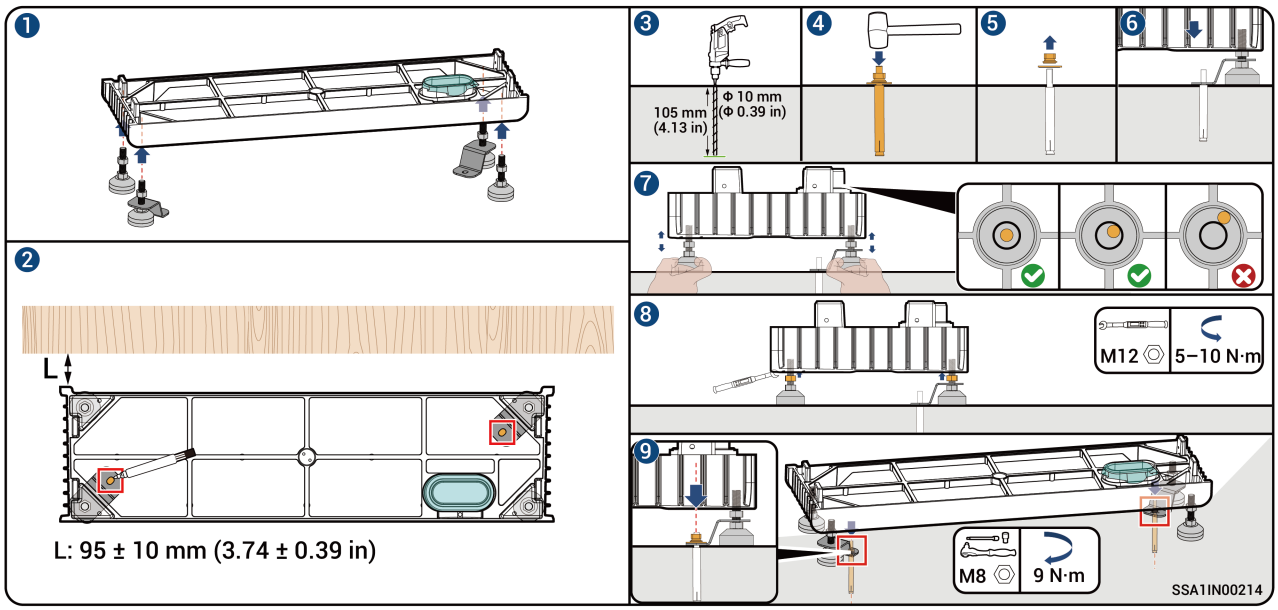

5.1.2 Installing Battery Packs and Inverters

Solid Brick, Concrete, or Other Wall Scenarios

1. Determine the positions for the wall-mounting bracket holes and drill them.

> **Tips**
>
> - Use a 3-battery-pack configuration as an example.
> - Ensure the drilled wall thickness is greater than the expansion bolt length.
> - Install the expansion bolts into the wall, then remove the nuts and store them securely for later use.
> - A1/A2/A3: Guide hole positions, B: Wall-mounting bracket hole positions.

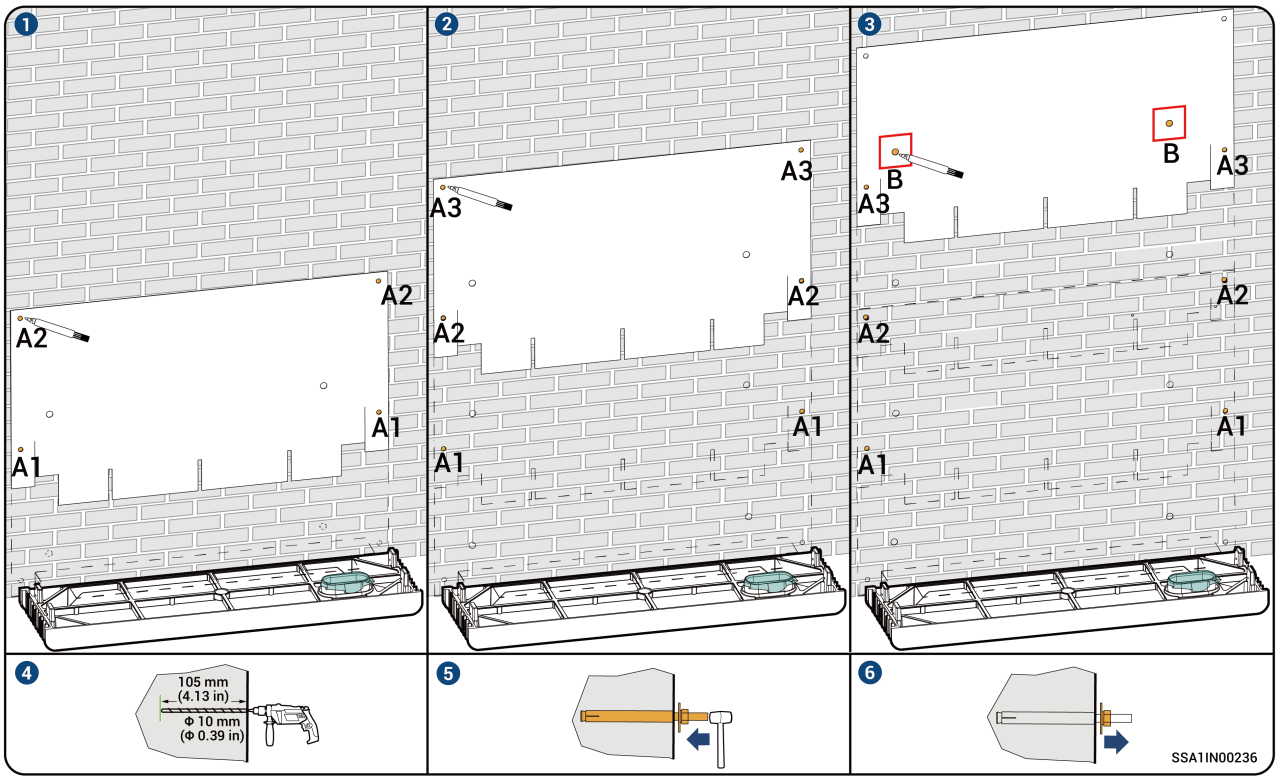

2. Keep the SigenStor Neo BAT horizontal and install it vertically downward.
   - Method 1: Install using the supplied handle.

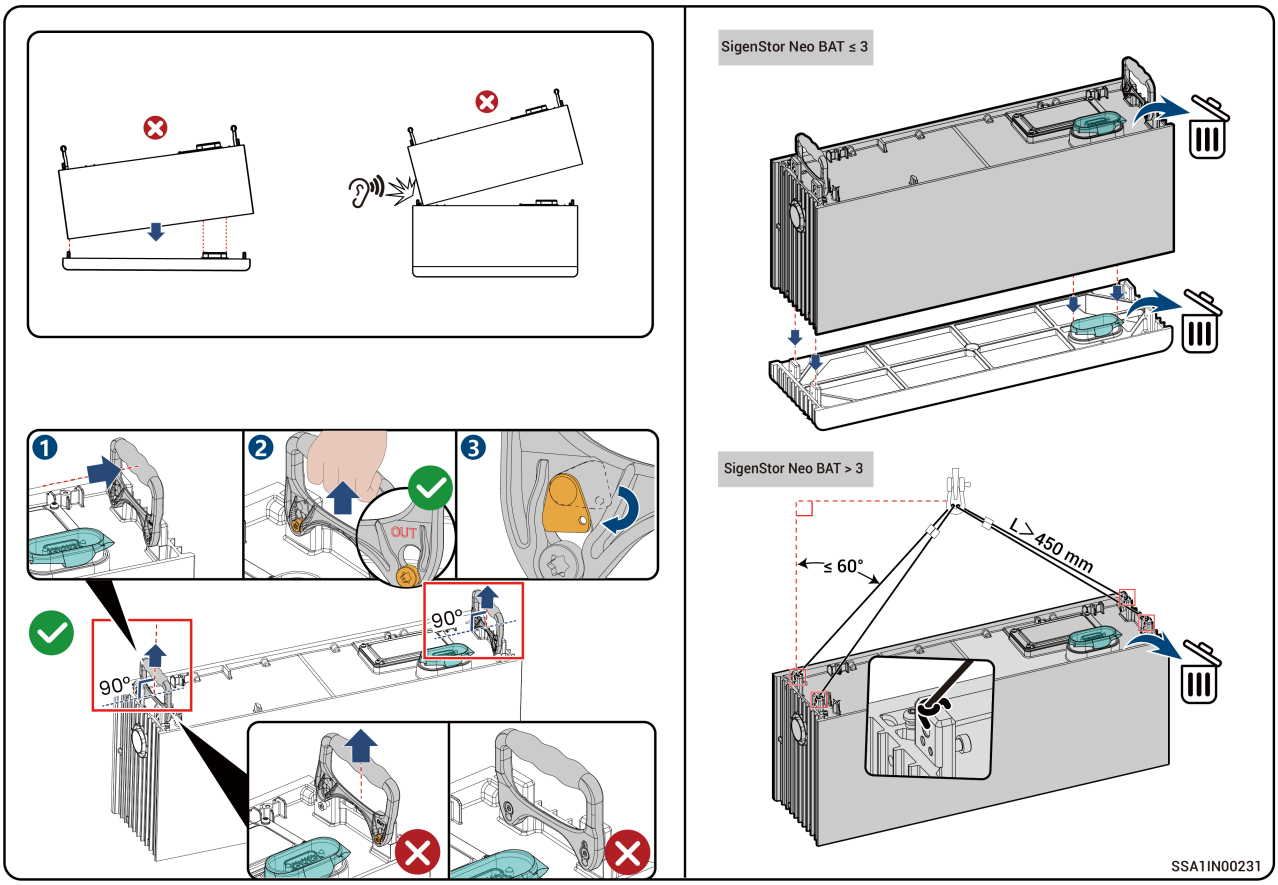

□ Method 2: Install using the lifting handle

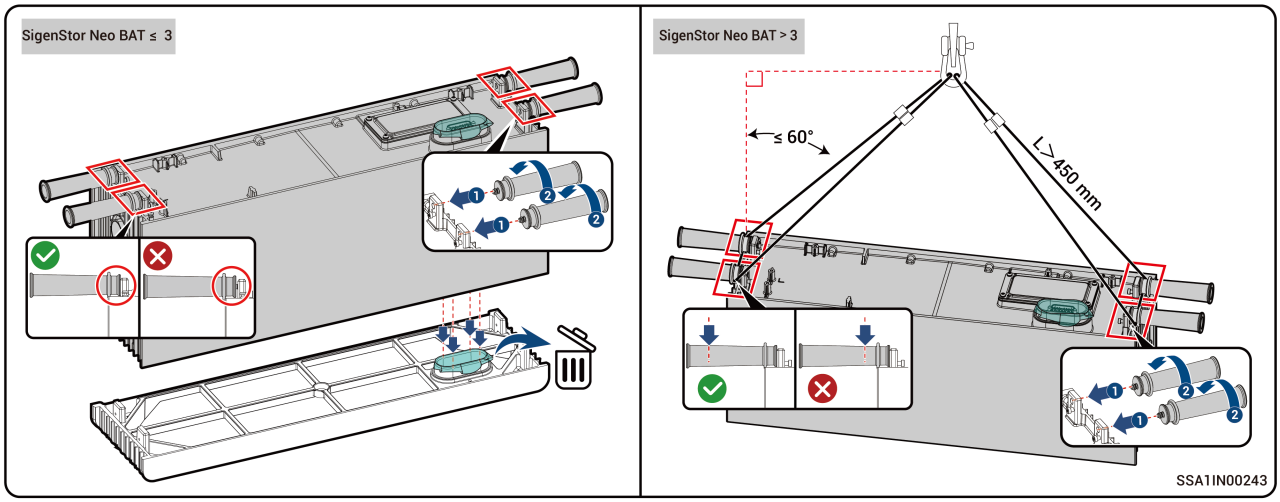

3. Install the wall-mounting bracket, then place the SigenStor Neo EC.

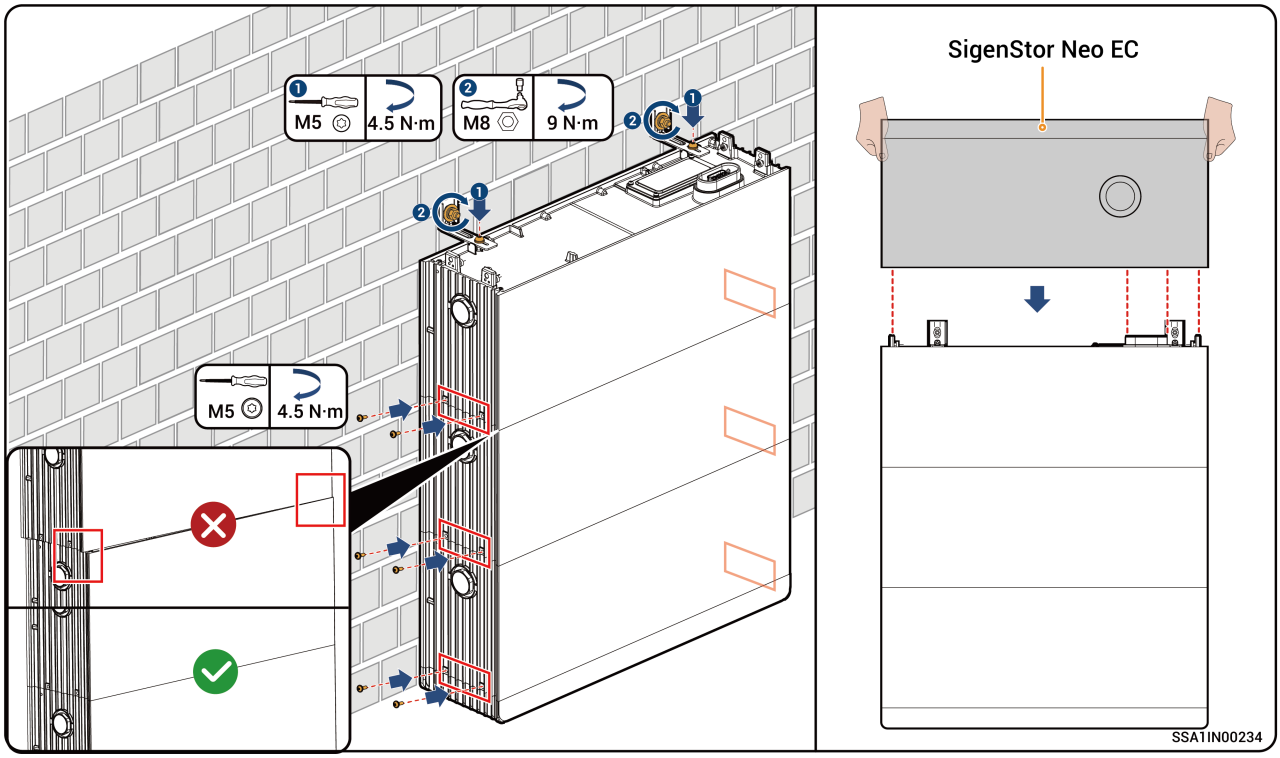

4. Tighten the cascade screws (Step ② is optional; you can only install the inverter padlock to prevent the device from being stolen).

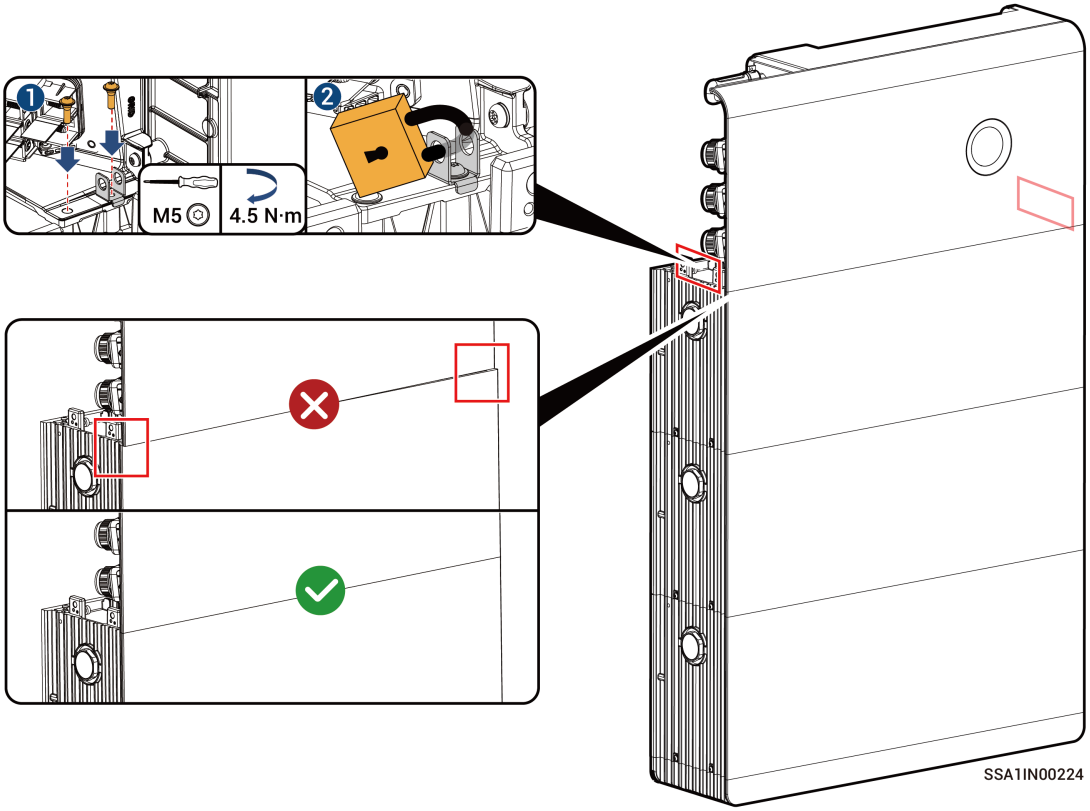

Wooden Wall Scenario

1. Keep the SigenStor Neo BAT horizontal and install it vertically downward.
   - Method 1: Install using the supplied handle.

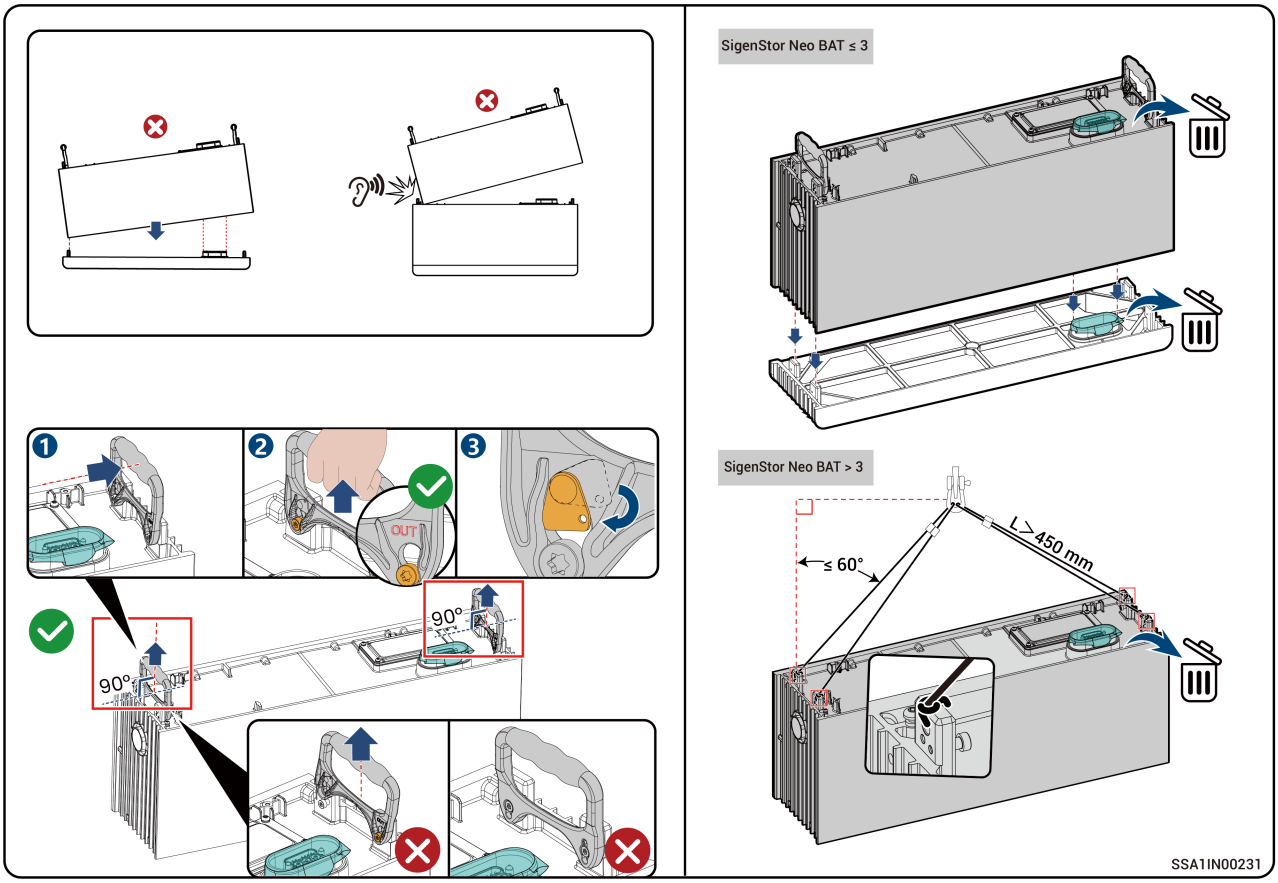

   - Method 2: Install using the lifting handle

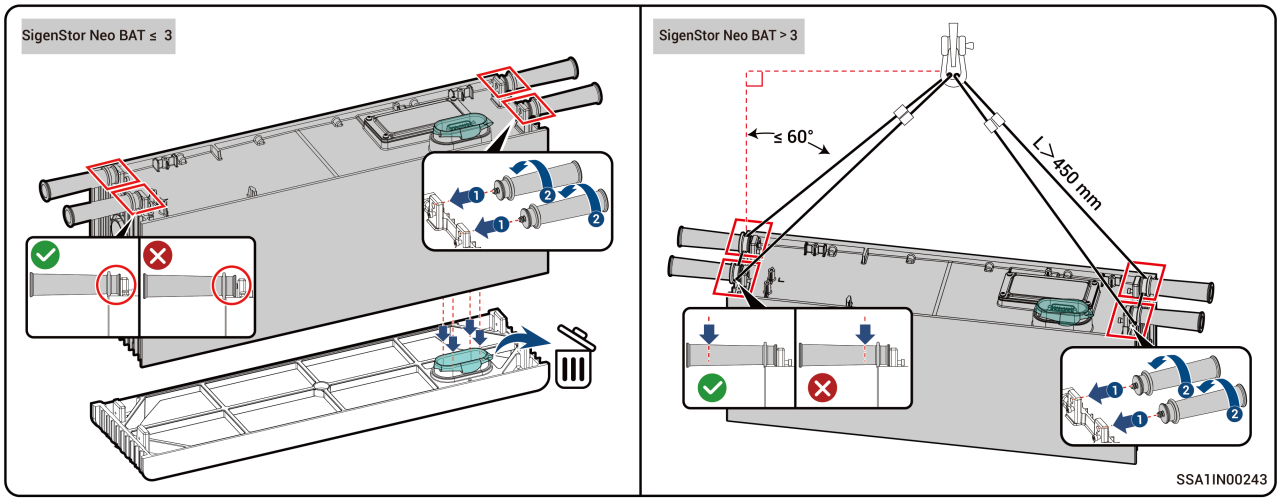

2. Install the wall-mounting bracket, then place the SigenStor Neo EC.

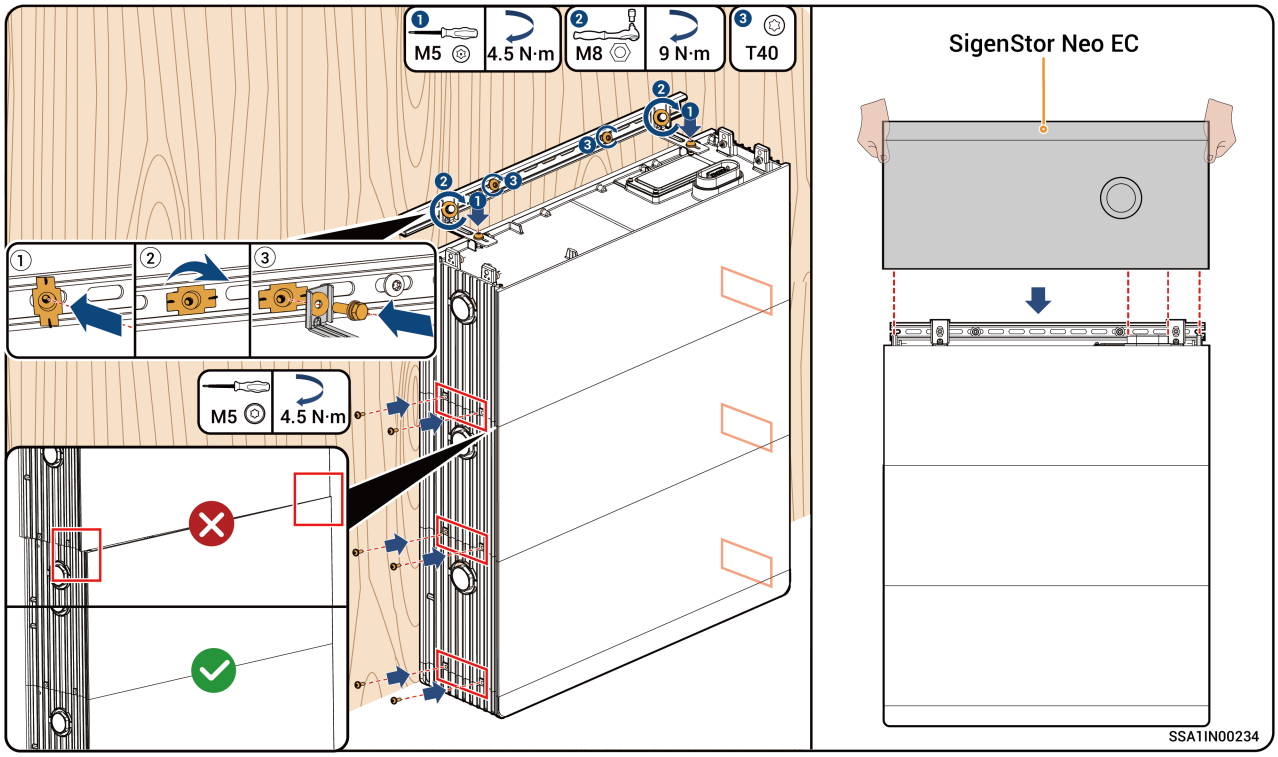

3. Tighten the cascade screws (Step ② is optional; you can only install the inverter padlock to prevent the device from being stolen).

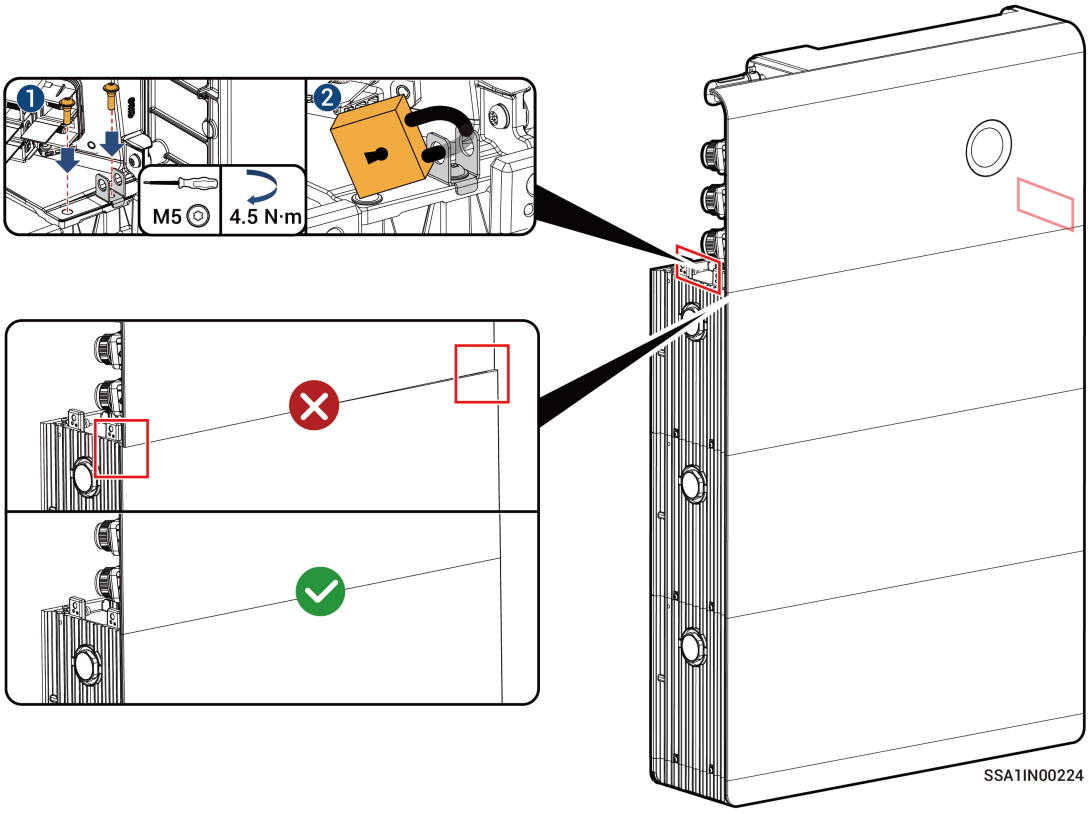

5.2 Wall Mounting

5.2.1 Installing the Base

Solid Brick, Concrete, or Other Wall Scenarios

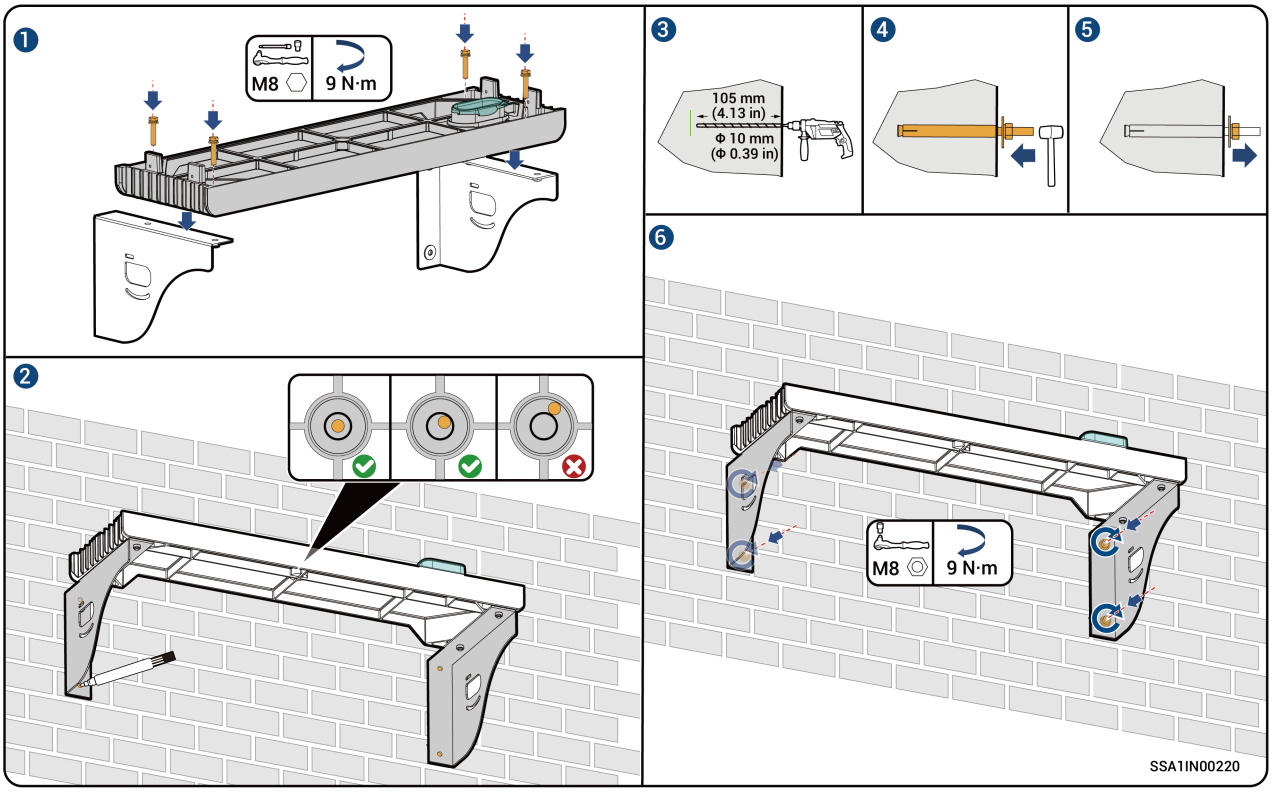

Wooden Wall Scenario

Tips

- Ensure the wall at the installation location should be designed to support at least three times the device weight.
- Use wood screws to secure the wall-mount base to the load-bearing frame.

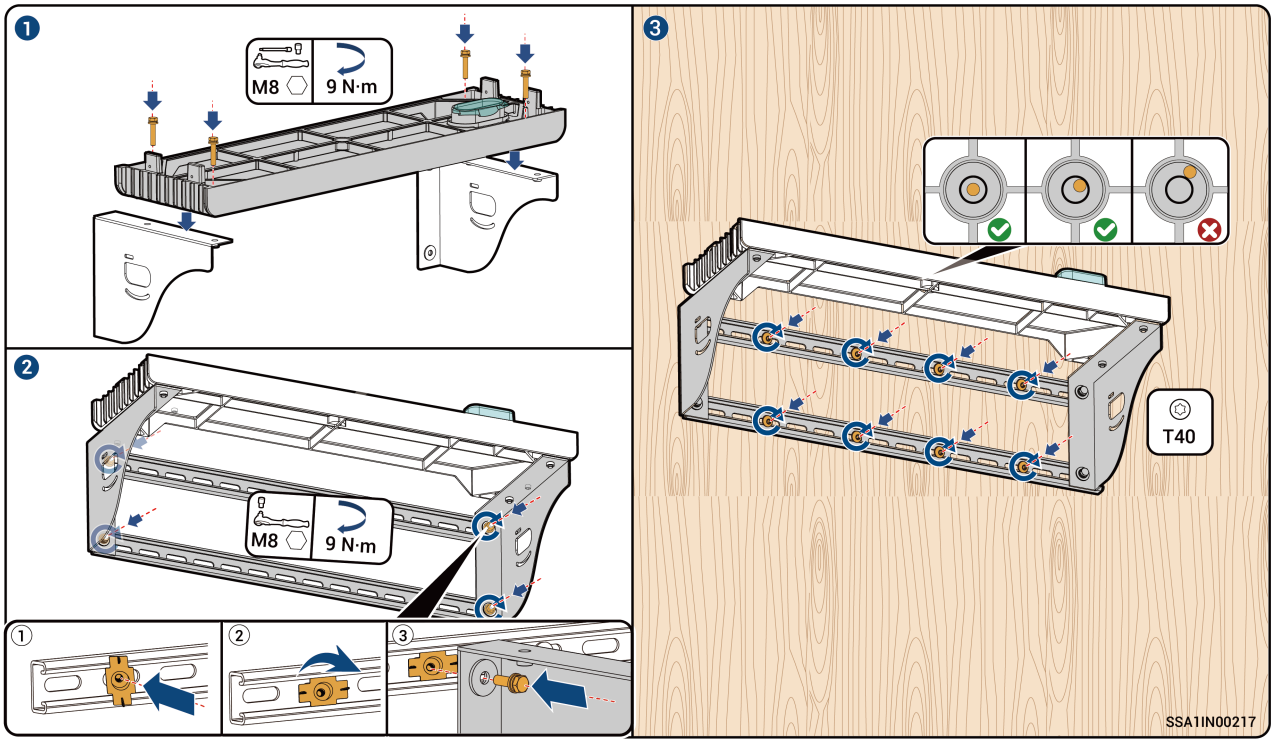

5.2.2 Installing Battery Packs and Inverters

Solid Brick, Concrete, or Other Wall Scenarios

1. To install the SigenStor Neo BAT, please refer to the step ② of the solid brick or concrete wall scenario in Floor Mounting.
2. To install the wall-mounting bracket and place the SigenStor Neo EC, please refer to the step ③ of the solid brick or concrete wall scenario in Floor Mounting.
3. To tighten the cascade screws, please refer to the step ④ of the solid brick or concrete wall scenario in Floor Mounting.

Wooden Wall Scenario

1. To install the SigenStor Neo BAT, please refer to the step ① of the wooden wall scenario in Floor Mounting.
2. To install the wall-mounting bracket and place the SigenStor Neo EC, please refer to the step ② of the wooden wall scenario in Floor Mounting.
3. To tighten the cascade screws, please refer to the step ③ of the wooden wall scenario in Floor Mounting.

Chapter 6 Cable Connection and Component Installation

Danger

- Before connecting the cables, please ensure the "DC SWITCH" is in the "OFF" position and the upstream switch of the AC cable is turned off.
- Do not operate live devices. Before operation, please make sure all power supplies to the device have been disconnected, including but not limited to the grid side, inverter, and diesel generator power switches.
- Do not leave construction residues, for example, cut cores of cables, in or around the device, such as, in terminals and in or around fans.

6.1 Connection Relationships

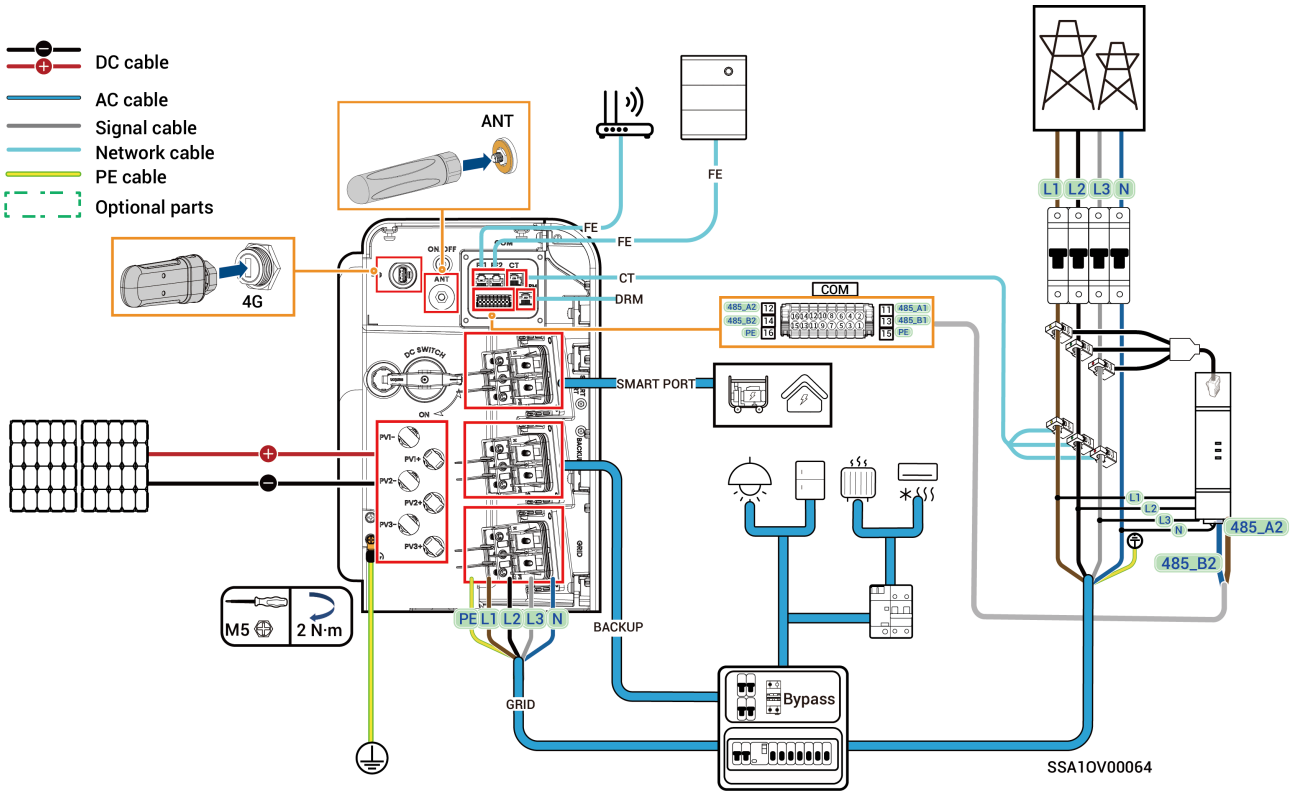

6.2 Recommended Wiring Scheme

- The cable colors shown in the diagram are only used to distinguish different cable types. The actual cable colors used shall prevail.
- Power cables and signal cables must be tied separately.
- Select one of the two wiring schemes based on the actual site conditions.
- PVC wiring ducts or PVC conduits are recommended to wrap cables outside decorative parts. Recommended PVC wiring duct size: 60 mm × 50 mm (2.36 in × 1.97 in). Recommended PVC conduit diameter: ≥ Φ80 mm (3.15 in).

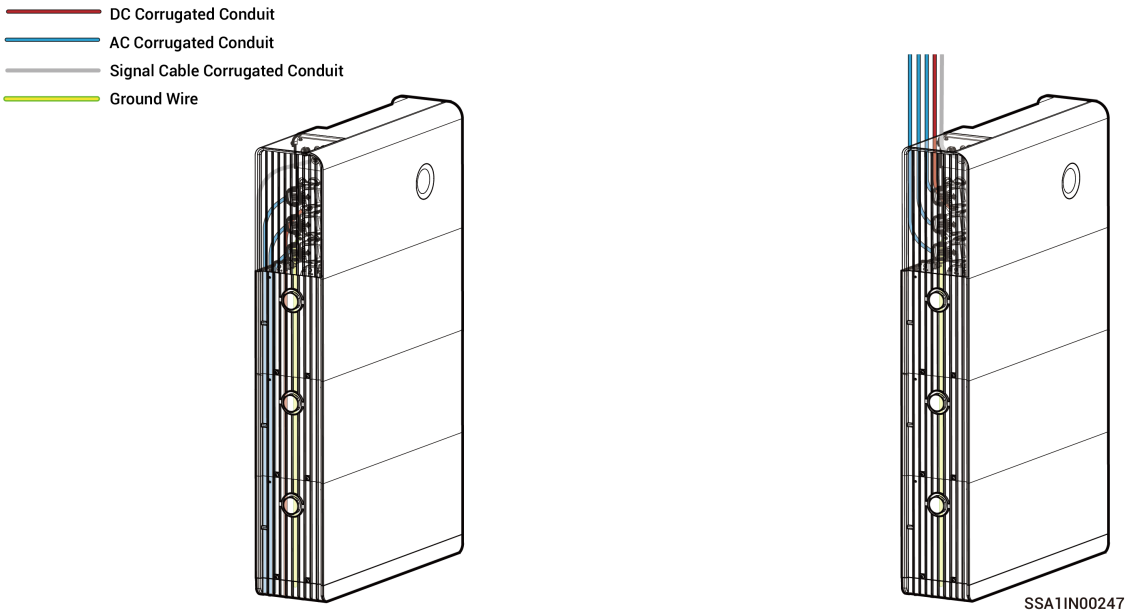

6.3 Protective Chassis Grounding Cable Connection

Tips

Use the OT terminals supplied in the original package to connect the protective ground cable to a nearby grounding point.

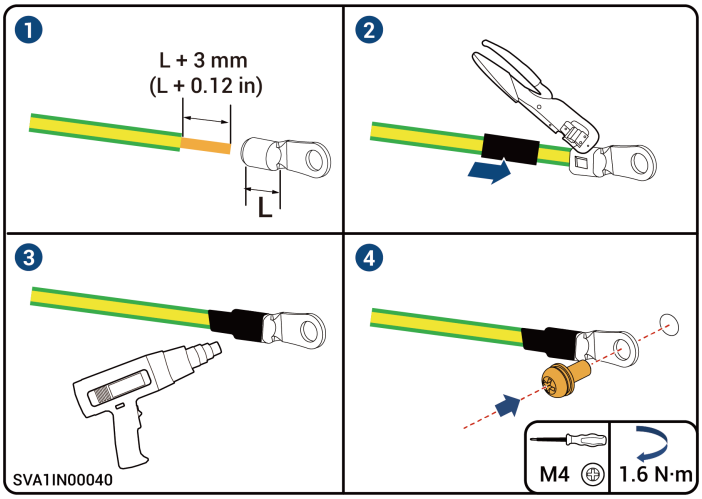

6.4 DC Input Cable Connection

Tips

- Please make sure that the circuit breaker on the PV side is de-energized before connection.
- Please use the PV terminals supplied with the packing box. The use of terminals from other brands is not allowed, as mixing them poses risks.

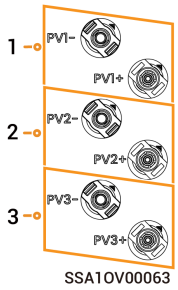

Power Range	PV String Configuration
3.0—15.0 kW	Connect 3 strings

Caution

- If the multimeter measures a negative voltage, the polarity is reversed. Correct it promptly.
- Please select the PV strings according to the product specifications listed in the table.

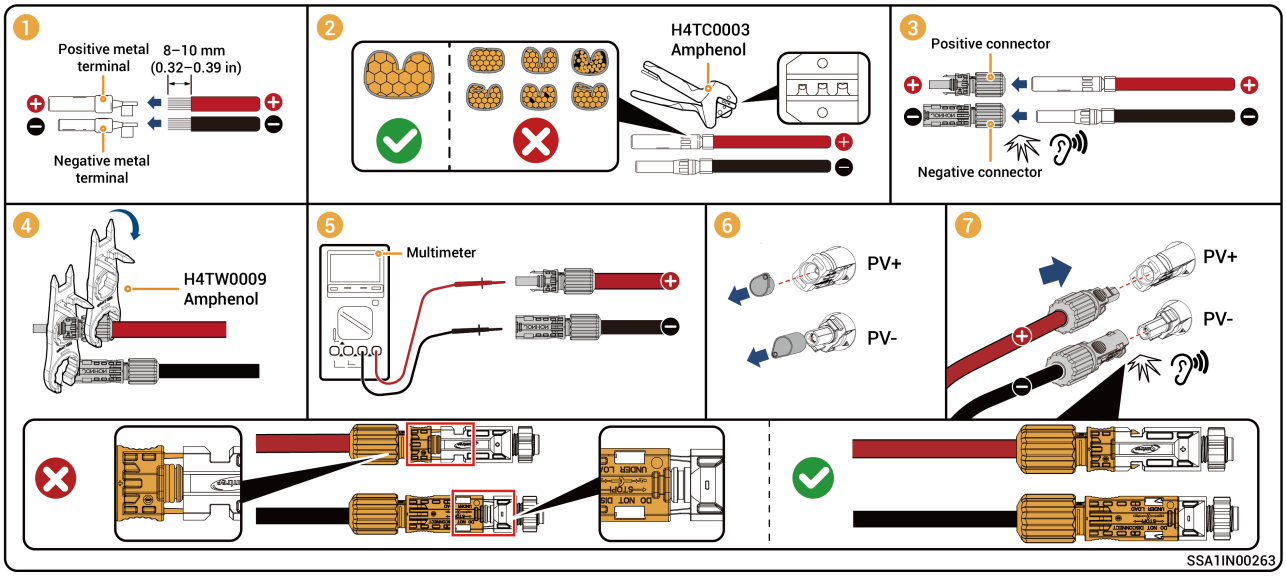

6.5 AC Output Cable Connection

Tips

The AC terminal stud is angled. When tightening the nut with a socket, the socket should be tilted accordingly so that it is aligned with the axis of the AC terminal stud, ensuring the socket can be smoothly fitted on before tightening the nut.

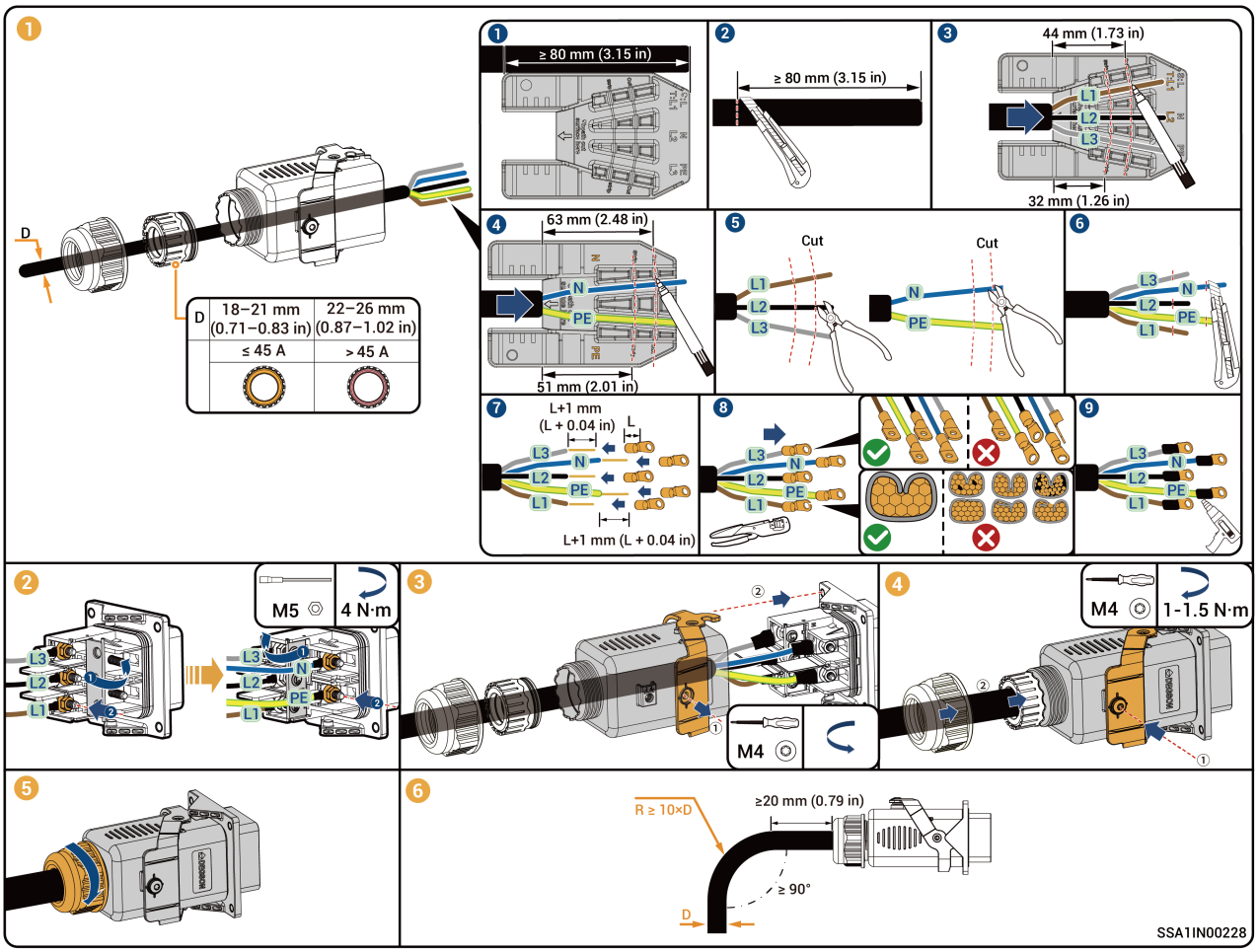

6.6 Signal Cable Connection

Tips

Purchase power sensors through our company's official channels. Refer to the user manual that accompanies the shipment for the sensor's appearance and detailed wiring instructions.

6.6.1 COM Port Description

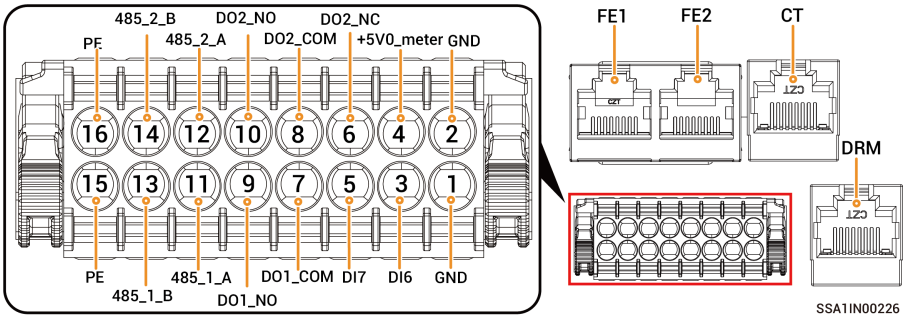

Interface	Definition	Description	Sigen Sensor TP-DH (SDM630-M)
FE1/FE2	High-speed Ethernet port	Two Ethernet ports, of which one can be connected to the router, and the other can be connected to other devices (e.g., inverter, Gateway, etc.)	-
CT	-	CT sensor interface.	-
DRM	-	DRM/RCR/digital signal inputs.	-
1	GND	Common GND.	-
2	GND	Common GND.	-
3	DI6	Digital signal input 6.	-
4	+5V0_meter	SUB-1G 5 V power supply.	-
5	DI7	Digital signal input 7.	-
6	DO2_NC	Supports up to 24 V signal voltage and 1 A signal current, such as connecting diesel generator-side relay status, smart load control, grid-side relay status, SG Ready heat pump, and diesel generator two-wire start.	-
7	DO1_COM		-
8	DO2_COM		-
9	DO1_NO		-
10	DO2_NO		-
11	485_1_A	Custom port. Used to connect a third-party EMS controller, an electric meter, or a heat pump.	-
13	485_1_B		-
15	PE		-

Interface	Definition	Description	Sigen Sensor TP-DH (SDM630-M)
12	485_2_A	Used to connect a grid-connection-point power sensor.	14
14	485_2_B		13
16	PE		-

6.6.2 RS485 Signal Cable Connection

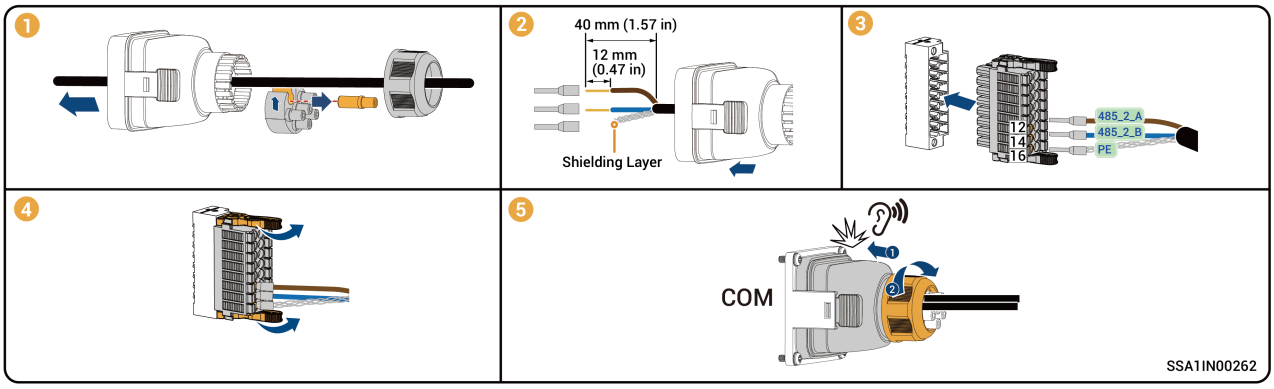

6.6.3 RJ45 Network Cable Connection (FE1/FE2)

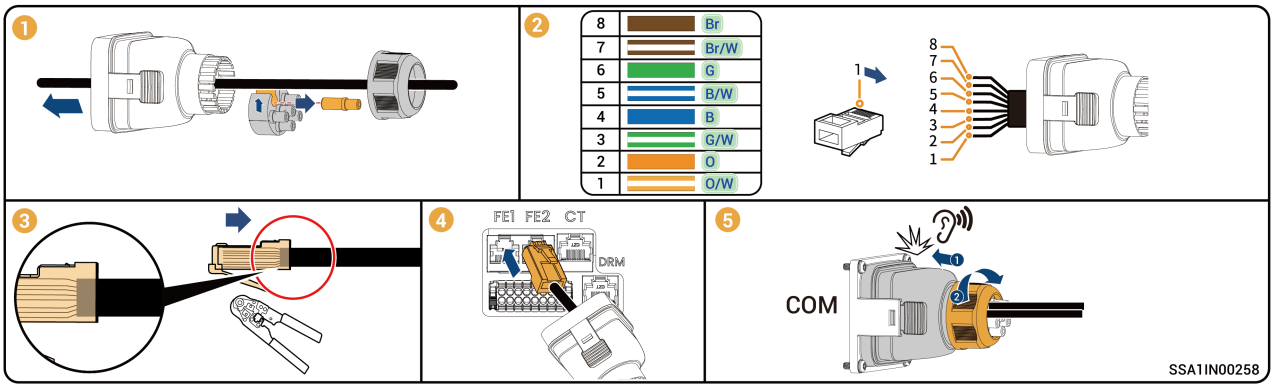

6.6.4 CT Connection

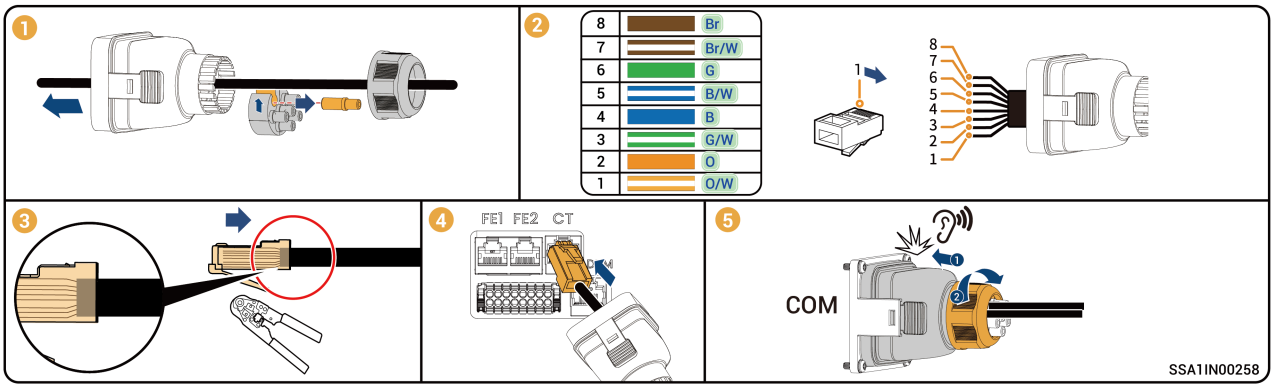

6.6.5 DRM Connection

(Optional) Used for German RCR

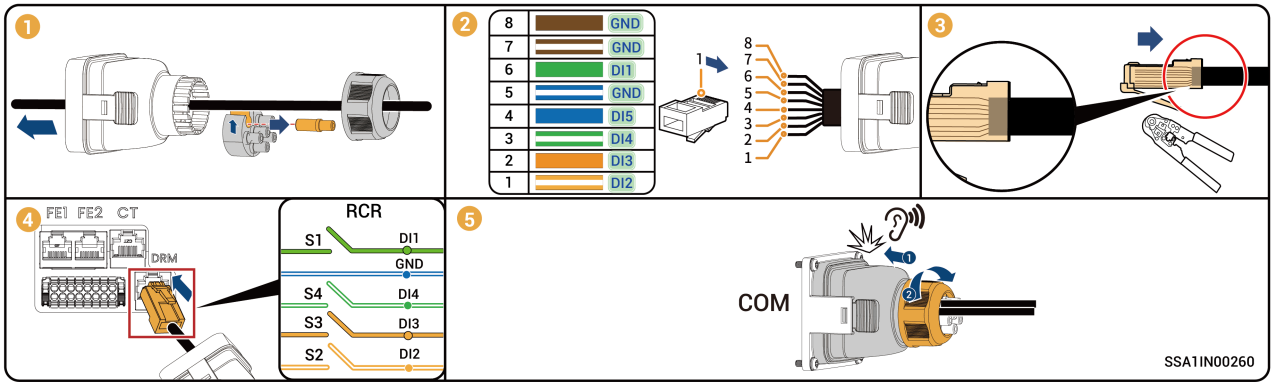

No.	Definition	Function Description
1	DI2	RCR function DI2
2	DI3	RCR function DI3
3	DI4	RCR function DI4
4	DI5	RCR function DI5
5	GND	/
6	DI1	RCR function DI1
7	GND	Common GND
8	GND	Common GND

Used as Digital Signal Input

The DRM and COM ports can both be reused as digital inputs. The DRM port contains DI1~DI5, and the COM port contains DI6 and DI7.

No.	Definition	Function Description
1	DI2	Digital signal input DI2
2	DI3	Digital signal input DI3
3	DI4	Digital signal input DI4
4	DI5	Digital signal input DI5
5	GND	Common GND
6	DI1	Digital signal input DI1
7	GND	Common GND
8	GND	Common GND

6.6.6 (Optional) NS Protective Device Connection

Tips

- Connect an NS protective device if DI1/DI2/DI3/DI4/DI5/DI6/DI7 and GND are not connected to other devices.
- The operation for connecting DI1/DI2/DI3/DI4/DI5/DI6/DI7 and GND to an NS protective device is the same. This section uses DI6 and GND as an example.
- When the NS protective device switch is turned on, and the NS protection function is triggered, the inverter automatically shuts down.
- When the NS protective device switch is turned off, and the NS protection function is not enabled, the inverter must be manually shut down.
- After creating new systems, you can use mySigen App to set NS protection parameters. For detailed operating steps, please refer to the DI Customization section in the mySigen App Installer Manual.

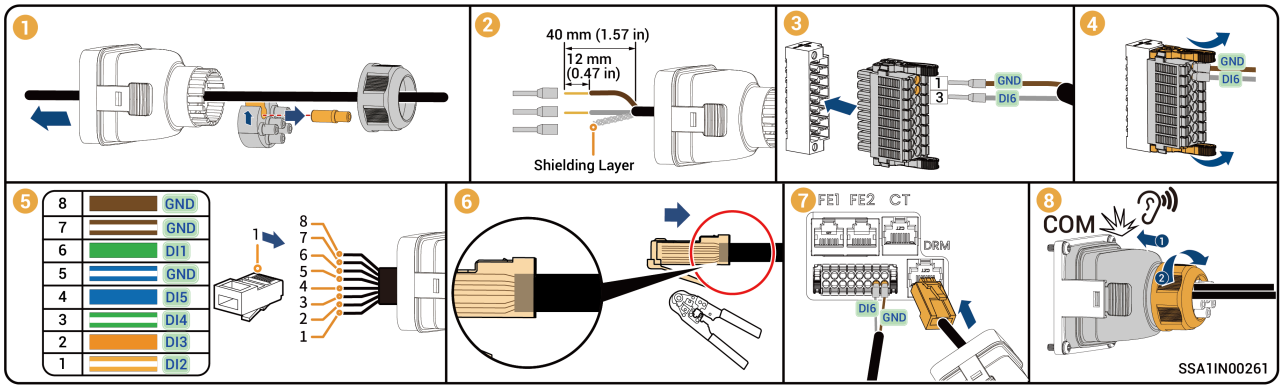

6.6.7 (Optional) Emergency Power Off (EPO) Button Connection

Tips

- If DI1, DI2, DI3, DI4, DI5, DI6, DI7, and GND are not connected to other devices, an emergency power off (EPO) button can be connected.
- The connection methods for DI1, DI2, DI3, DI4, DI5, DI6, DI7, and GND to the EPO button are the same. This chapter uses DI6 and GND as an example.
- To prevent misoperations, the EPO button must have a protective cover, and the connecting cables must be protected with conduits.
- After creating a new system for the device, use the mySigen App to set the EPO protection parameters. For detailed operating steps, please refer to the DI Customization section in the mySigen App Installer Manual.

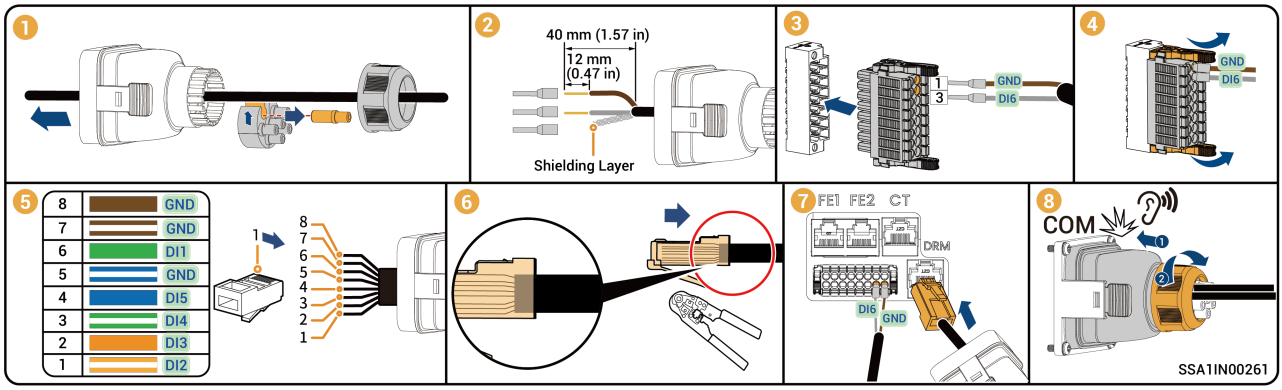

6.7 WLAN Antenna Installation

Tips

- When using WLAN communication, an antenna shall be installed.
- To ensure good communication, the antenna must be tightened clockwise. The antenna rod is tightened up when it cannot be easily turned counterclockwise.

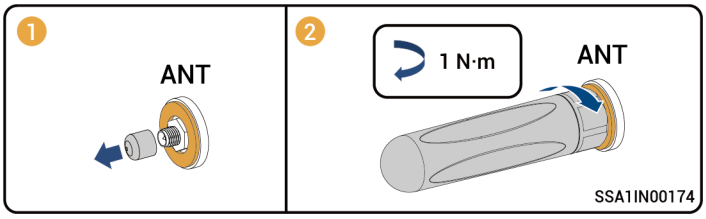

6.8 (Optional) Replacing SIM Card of Sigen CommMod

Tips

- After the purchased CommMod's complimentary 4G data is used up, the SIM card needs to be replaced.
- Please replace the SIM card in the Sigen CommMod with a SIM card from the country or region where the device is located. Recommended data plan: ≥ 50 MB/month × N. (Wherein, N is the number of inverters)

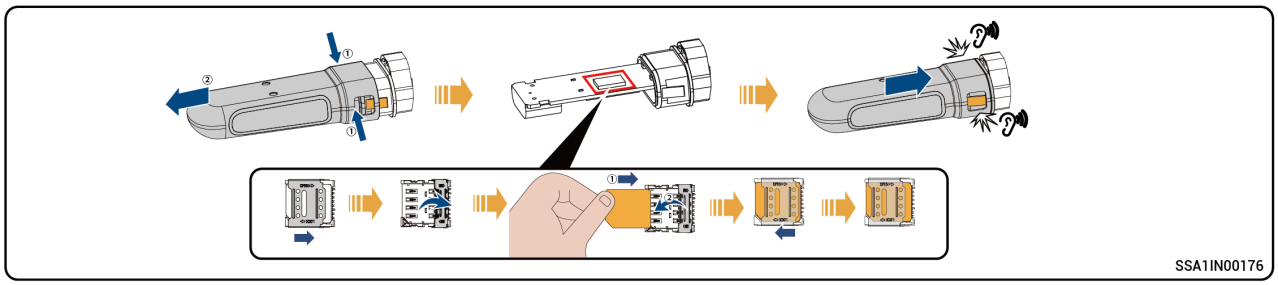

6.9 Sigen CommMod Installation

Tips

When using 4G communication, Sigen CommMod shall be installed.

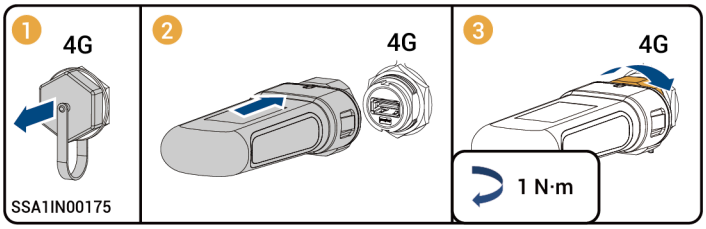

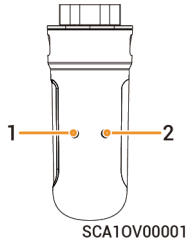

No.	Indicator	Description
1	Power indicator	–
2	Network status indicator	● Slow flashing (200 ms on/1800 ms off): Connecting to the network ● Slow flashing (1800 ms on/200 ms off): On standby ● Quick flashing (125 ms on/125 ms off): Data transfer in progress

Chapter 7 Inspections After Installation

No.	Check Item
1	The device is securely installed.
2	Grounding cables, AC cables, and signal cables are properly connected without omission.
3	Lock screws or wiring terminals are installed in place without any looseness.
4	Cutouts of cable ties are free of burr or sharp edges.
5	"DC SWITCH" is in the "OFF" state.
6	Unused ports are protected with water-proof covers or water-proof plugs.
7	No construction residue inside and outside the device.

After confirming there are no errors, route the wiring and install the SigenStor Neo EC decorative cover.

Chapter 8 Device Power-on

1. Turn on the upstream AC switch.
2. Rotate the "DC SWITCH" to the "ON" position.
3. Observe the status of the indicator on the front of the inverter to understand the device status.

Tips

If the "DC SWITCH" trips off automatically and you need to re-power, rotate the "DC SWITCH" to "OFF" first, then back to "ON."

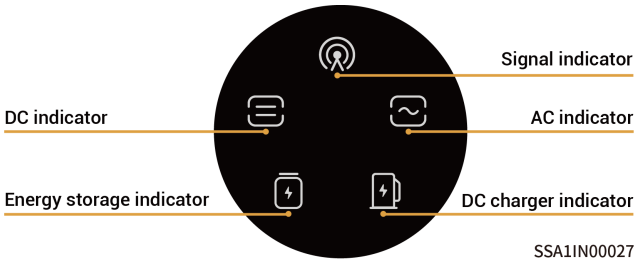

Indicator	Color	Status	Meaning
		Steady on	The DC side has been connected, but is not running.
		Steady on	The DC side is running.
		-	The DC side is not connected.
		Blink	The DC side fails.
		Steady on	The inverter fails.
		-	The AC side is not connected.
		Steady on	The AC side has been connected, but is not running.
		Steady on	Running in an on-grid state.
		Steady on	Running in an off-grid state.
		Blink	Running with overload in an off-grid state.
		Blink	The AC side fails.
		Steady on	The inverter fails.
		Steady on	All SigenStor Neo BATs have been connected, but are not running.
		Blink	SigenStor Neo BAT charging.
		Blink	SigenStor Neo BAT discharging.

Indicator	Color	Status	Meaning
		-	All SigenStor Neo BATs are sleeping.
		Blink	Some of SigenStor Neo BATs are faulty.
		Steady on	All SigenStor Neo BATs fail.
		-	The management system is not connected.
		Blink	The app is being connected to the hotspot of the device.
		Steady on	The management system has been connected via FE or WLAN.
		Steady on	The management system has been connected via 4G.
		Blink	Insufficient traffic for Sigen CommMod.
		-	Reserved

Chapter 9 Decorative Cover Installation

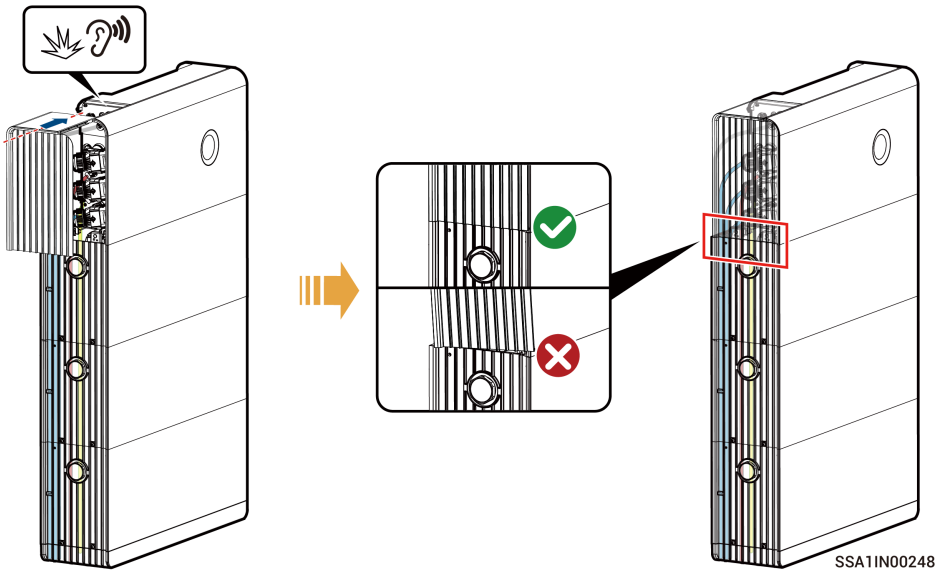

Remove the decorative cover by following the illustrated instructions:

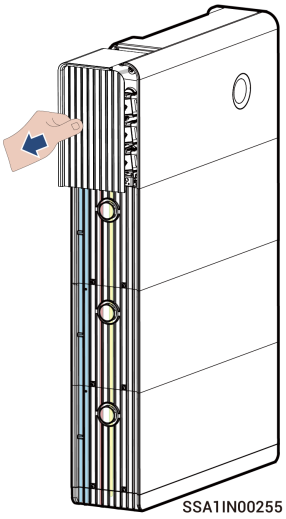

Chapter 10 mySigen App — Download and New System Creation

App Download

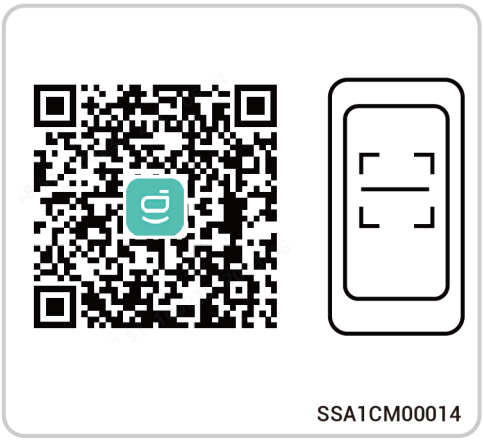

Registering an Installer Account

- It is recommended that your installer registers an account for completing the system creation process.
- After the installer completes the operation, notify the owner to check the "sigencloud" email within 24 hours and activate the account.

Method 1: Please visit our company's website (https://business.sigencloud.com/business-service/user/register) and complete the account registration based on your actual situation.
Method 2: Open the App, tap the "Register" button at the bottom, and complete the account registration according to your actual situation.

Creating a New System

For detailed new system creation procedures, please refer to the chapter SigenStor All-in-one Machine / Sigen Inverter System Creation in mySigen App Guide for Creating New Systems.