vietnamsolar.vn

Sigen Hybrid SP2, TP2 Series and SigenStor Energy Storage System

User Manual

Version: 01

Release date: 2025-06-30



Copyright Notice

Copyright© 2025 SigenergyTechnology Co., Ltd. All Rights Reserved.

Description in this document may contain predictive statements regarding financial and operating results, product portfolio, new technology, configurations and features of product. Several factors could cause difference between actual results and those expressed or implied in the predictive statements. Therefore, description in this document is provided for reference purpose only and constitutes neither an offer nor an acceptance. Sigenergy Technology Co., Ltd. may change the information at any time without notice.

SIGENERGY and other Sigenergy trademarks are owned by Sigenergy Technology Co., Ltd.

All trademarks and registered trademarks in this document belong to their owners.

Website | LinkedIn | YouTube

www.sigenergy.com

Contents

Revision History **05**

Overview **06**

Chapter 1 Safety Precautions **07**

Chapter 2 Product Introduction **09**

2.1 Product Model 09

2.2 Product Appearance 11

2.2.1 Sigen Hybrid (2.0-6.0) SP2 Series 11

2.2.2 Sigen Hybrid (3.0-12.0) TP2 Series 12

2.2.3 SigenStor Energy Storage System 13

2.3 Label Description 14

2.4 Supported Power Supply Methods for the Power Grid 15

2.4.1 Sigen Hybrid (2.0-6.0) SP2 Series 15

2.4.2 Sigen Hybrid (3.0-12.0) TP2 Series 16

2.5 Introduction to system wiring 17

2.5.1 PV System Wiring 17

2.5.2 PV Storage System Wiring 19

Chapter 3 Site Selection Requirements **26**

Chapter 4 Equipment Installation and Wiring **29**

Chapter 5 System Operation **30**

5.1 Operational Mode 30

5.2 Backup power setup 33

5.3 Peak Shaving Control Mode 34

5.4 LED Indicator State 37

5.5 mySigen App Query and Setting 40

Chapter 6 System Maintenance **41**

6.1 Routine Maintenance 41

6.2 Equipment Power-on/Power-off 42

6.3 Low SOC 43

6.4 Emergency Treatment 44

Chapter 7 Technical Parameter 46

Revision History

Version	Date	Description
01	2025.06.30	First official release.

vietnamsolar.vn

Overview

Introduction

This document primarily introduces the Sigen Hybrid (2.0-6.0) SP2 series inverters, Sigen Hybrid (3.0-12.0) TP2 series inverters, and SigenStor energy storage system, covering product introduction, system wiring, and system operation and maintenance.

Readers

This document is suitable for product users and professionals.

Sign Definition

The following signs may be used in the document to indicate security precautions or key information. Before installation, operation, and maintenance of the equipment, familiarize yourself with signs and their definitions.

Signs	Definition
Danger	Danger. Failure to comply will result in death or serious personal injury.
Warning	Warning. Failure to comply will result in serious personal injury or property damage.
Caution	Caution. Failure to comply will result in property damage.
Tips	Important or key information, and supplementary operation tips.

Chapter 1 Safety Precautions

Basic Information

Before installation, operation, and maintenance of the equipment, familiarize yourself with this document.
The "Danger ", "Warning", "Caution" items described in this manual are only supplementary to all precautions.
The Company shall not be liable for equipment damage or property loss caused by the following reasons:

- Failure to obtain approval from the national, regional power authority.
- The installation environment does not meet international, national, or regional standards.
- Failure to observe local laws, regulations and norms when operating and maintaining equipment.
- The installation area does not meet the requirements of the equipment.
- Failure to follow the instructions and precautions in this document.
- Failure to follow the warning labels on equipment or tools.
- Negligent, improper operation or intentional damage.
- Battery capacity loss or irreversible damage caused by your failure to charge the device in time.
- Damage caused by your or a third party's replacement of our equipment (such as mixing our battery pack with other batteries, using our battery pack with other brands of inverters or converters, etc.).
- The equipment is damaged because of your or a third-party company fails to use the accessories supplied with the packing box or purchase and install accessories of the same specification.
- Equipment damage caused by improper operations such as disassembling, replacing, or modifying the software code without authorization.
- Equipment damage caused by force majeure (such as war, earthquake, fire, storm, lightning, flood, debris flow, etc.).
- Damage caused by the failure of the natural environment or external power parameters to meet the standard requirements of the equipment during actual operation (for example, the actual operating temperature of the equipment is too high or too low).
- The equipment was stolen.
- The equipment is damaged after the warranty period.

Safety Requirements

Danger

- An overheated battery pack may cause fire or explosion. Do not expose the device to high temperature or heat sources (such as fire, or heaters) around the equipment for a long time.
- Do not clean or soak the equipment with water, alcohol, or oil to avoid power leakage or battery pack leakage.

Danger

- Do not tipover or cause impact to the equipment. In case of an accident, please stop using the equipment immediately and contact your installer or sales representative, The equipment shall be inspected and evaluated by professional personnel before continuing to use.

Warning

- Do not touch the heat sink when the equipment is operating.
- When the equipment is operating, do not cover the decorative cover plate and keep the heat dissipation channel of 300–600 mm to avoid fire at high temperature.

Caution

- Do not use the equipment if it has any defects. If the equipment appears abnormal (for example, battery pack leakage or appearance distortion), contact your installer or sales representative. It is prohibited to disassemble the equipment by yourself.
- Carbon dioxide fire extinguishers and ABC dry powder fire extinguishers are recommended at home.
- If the equipment cannot be charged, please contact your installer or sales representative in time.

Do not use the equipment in the following situations:

- When connected to public infrastructure systems.
- When connected to emergency medical equipment.
- When connected to elevators and other control devices.
- Any other critical systems.

vietnamsolar.vn

Chapter 2 Product Introduction

2.1 Product Model

Inverter (Sigen Hybrid)

The inverter supports standalone PV applications with PV modules or integrated PV storage systems when combined with PV modules and SigenStor BAT.

Model	Name
Sigen Hybrid 2.0 SP2	Sigen Hybrid Inverter 2.0 kW Single Phase
Sigen Hybrid 3.0 SP2	Sigen Hybrid Inverter 3.0 kW Single Phase
Sigen Hybrid 3.6 SP2	Sigen Hybrid Inverter 3.6 kW Single Phase
Sigen Hybrid 4.0 SP2	Sigen Hybrid Inverter 4.0 kW Single Phase
Sigen Hybrid 4.6 SP2	Sigen Hybrid Inverter 4.6 kW Single Phase
Sigen Hybrid 5.0 SP2	Sigen Hybrid Inverter 5.0 kW Single Phase
Sigen Hybrid 6.0 SP2	Sigen Hybrid Inverter 6.0 kW Single Phase
Sigen Hybrid 3.0 SP2 AU	Sigen Hybrid Inverter 3.0 kW Single Phase Australia
Sigen Hybrid 5.0 SP2 AU	Sigen Hybrid Inverter 5.0 kW Single Phase Australia
Sigen Hybrid 6.0 SP2 AU	Sigen Hybrid Inverter 6.0 kW Single Phase Australia
Sigen Hybrid 3.0 TP2	Sigen Hybrid Inverter 3.0 kW Three Phase
Sigen Hybrid 4.0 TP2	Sigen Hybrid Inverter 4.0 kW Three Phase
Sigen Hybrid 5.0 TP2	Sigen Hybrid Inverter 5.0 kW Three Phase
Sigen Hybrid 6.0 TP2	Sigen Hybrid Inverter 6.0 kW Three Phase
Sigen Hybrid 8.0 TP2	Sigen Hybrid Inverter 8.0 kW Three Phase
Sigen Hybrid 10.0 TP2	Sigen Hybrid Inverter 10.0 kW Three Phase
Sigen Hybrid 12.0 TP2	Sigen Hybrid Inverter 12.0 kW Three Phase
Sigen Hybrid 10.0 TP2 BE	Sigen Hybrid Inverter 10.0 kW Three Phase Belgium
Sigen Hybrid 5.0 TP2 AU	Sigen Hybrid Inverter 5.0 kW Three Phase Australia
Sigen Hybrid 6.0 TP2 AU	Sigen Hybrid Inverter 6.0 kW Three Phase Australia
Sigen Hybrid 8.0 TP2 AU	Sigen Hybrid Inverter 8.0 kW Three Phase Australia
Sigen Hybrid 10.0 TP2 AU	Sigen Hybrid Inverter 10.0 kW Three Phase Australia
Sigen Hybrid 12.0 TP2 AU	Sigen Hybrid Inverter 12.0 kW Three Phase Australia
Sigen Hybrid 7.5 TP2 BR	Sigen Hybrid Inverter 7.5 kW Three Phase Brazil

Battery Controller (SigenStor BC)

Provides power distribution, communication relaying, and control between Sigen Hybrid SP2/TP2 series inverters and SigenStor BAT battery packs.

Model	Name
SigenStor BC	Sigen Battery Controller
SigenStor BC AU	Sigen Battery Controller Australia

Battery Pack (SigenStor BAT)

Able to store electrical energy. Supports the simultaneous use of two models of battery packs.

Model	Name
SigenStor BAT 5.0	Sigen Battery 5 kWh
SigenStor BAT 6.0	Sigen Battery 6 kWh
SigenStor BAT 8.0	Sigen Battery 8 kWh
SigenStor BAT 10.0	Sigen Battery 10 kWh

Power Sensor

Equipped with grid connection point data collection to achieve zero-power grid connection functionality.

Model	Name
Sigen Sensor SP-DH（SDM230Modbus）	Sigen Power Sensor Single Phase DH
Sigen Sensor SP-CT120-DH（SDM120CT 40mA）	Sigen Power Sensor Single Phase External CT 120 A DH
Sigen Sensor TP-DH（SDM630MODBUS V2）	Sigen Power Sensor Three Phase DH
Sigen Sensor TP-CT120-DH(SDM630MCT 40mA/120A)	Sigen Power Sensor Three Phase External CT 120 A DH
Sigen Sensor TP-CT300-DH（SDM630MCT 40mA/300A）	Sigen Power Sensor Three Phase External CT 300 A DH
Sigen Sensor TP-CT600-DH（SDM630MCT V2/600A）	Sigen Power Sensor Three Phase External CT 600 A DH

Communication Module (CommMod)

If it's used with our inverters, the communication between inverters and management systems should be realized through 4G.

Model	Name
Sigen CommMod	Sigen Communication Module

2.2 Product Appearance

2.2.1 Sigen Hybrid (2.0-6.0) SP2 Series

Appearance and Dimensions

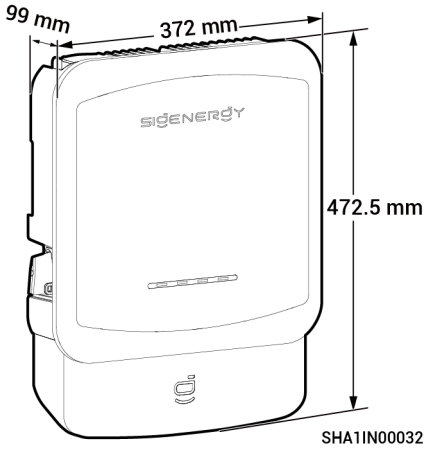

Port Introduction

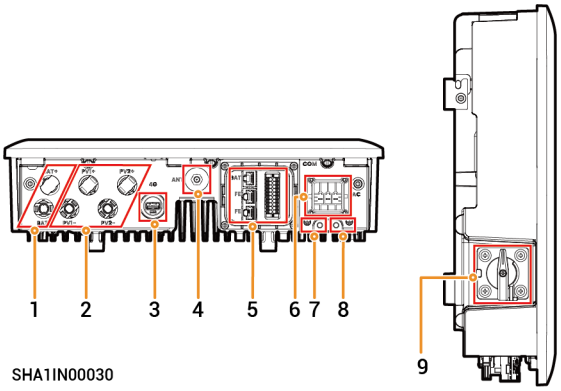

No.	Name	Marking
1	Battery pack input interface	BAT+/BAT-
2	DC terminal block	PV1+/PV1-/PV2+/PV2-
3	CommMod interface	4G
4	Antenna interface	ANT
5	Communication port	COM
6	AC terminal	AC
7	Grounding point (connected to the battery pack)	⏚
8	Grounding point (connected to the protective ground cable)	⏚
9	DC switch	DC SWITCH

2.2.2 Sigen Hybrid (3.0-12.0) TP2 Series

Appearance and Dimensions

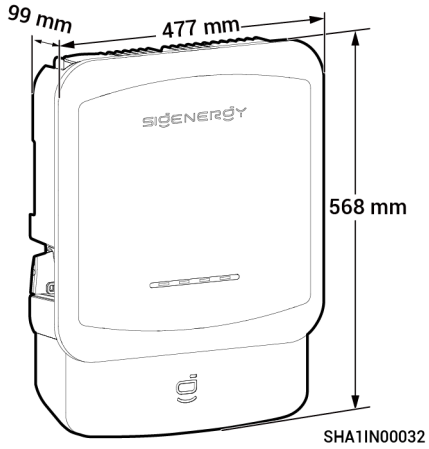

Port Introduction

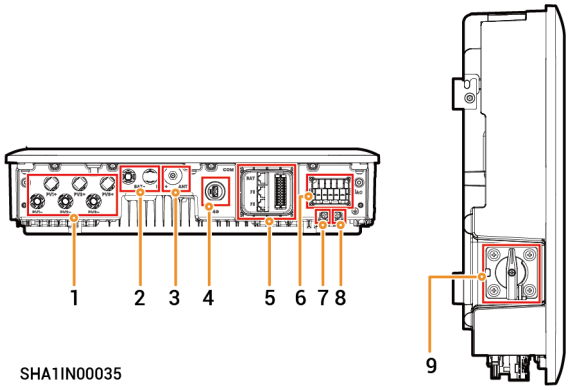

No.	Name	Marking
1	DC terminal block	PV1+/PV1-/PV2+/PV2-/PV3+/PV3-
2	Battery pack input interface	BAT+/BAT-
3	Antenna interface	ANT
4	CommMod interface	4G
5	Communication port	COM
6	AC terminal	AC
7	Grounding point (connected to the battery pack)	⏚
8	Grounding point (connected to the protective ground cable)	⏚
9	DC switch	DC SWITCH

2.2.3 SigenStor Energy Storage System

Appearance and Dimensions

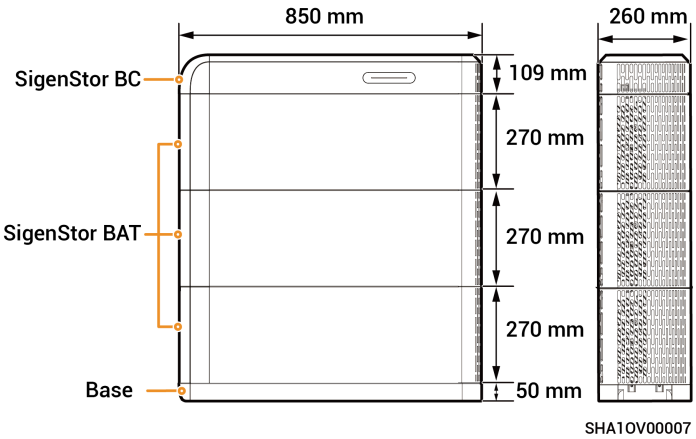

Port Introduction

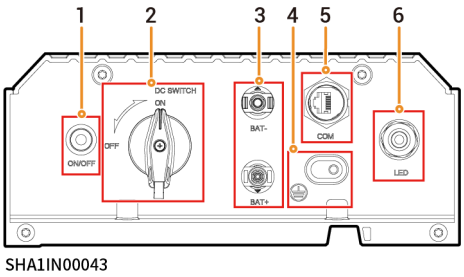

No.	Name	Marking
1	Power button	ON/OFF
2	DC switch	DC SWITCH
3	Battery pack input interface	BAT+/BAT-
4	Grounding point (connecting the inverter)	⏚
5	Communication port	COM
6	Decorative strip light	LED

vietnamsolar.vn

2.3 Label Description

Symbols	Definition
	Danger! High Voltage High voltage exists inside the equipment when powered on. Do not open the casing when the equipment is running. Any maintenance or servicing operations must be performed by trained and skilled electrical engineers.
	Warning! Life at risk. The equipment has potential hazards after running. Take proper protection when operating the equipment.
	After the equipment is powered off, internal components discharge in a delay time. Wait for the duration according to the delay time on the label until the equipment is fully discharged.
	Warning! Risk of burns. The surface of the heat dissipation area is hot when the equipment is running. Do not touch it to avoid burns.
	Please refer to the instructions to operate the equipment.
	Earthing mark

2.4 Supported Power Supply Methods for the Power Grid

2.4.1 Sigen Hybrid (2.0-6.0) SP2 Series

- Supported grid power modes are TN-S, TN-C, TN-C-S, and TT.
- When applied to the TT grid power mode, the voltage requirement for N to PE is less than 30 V.

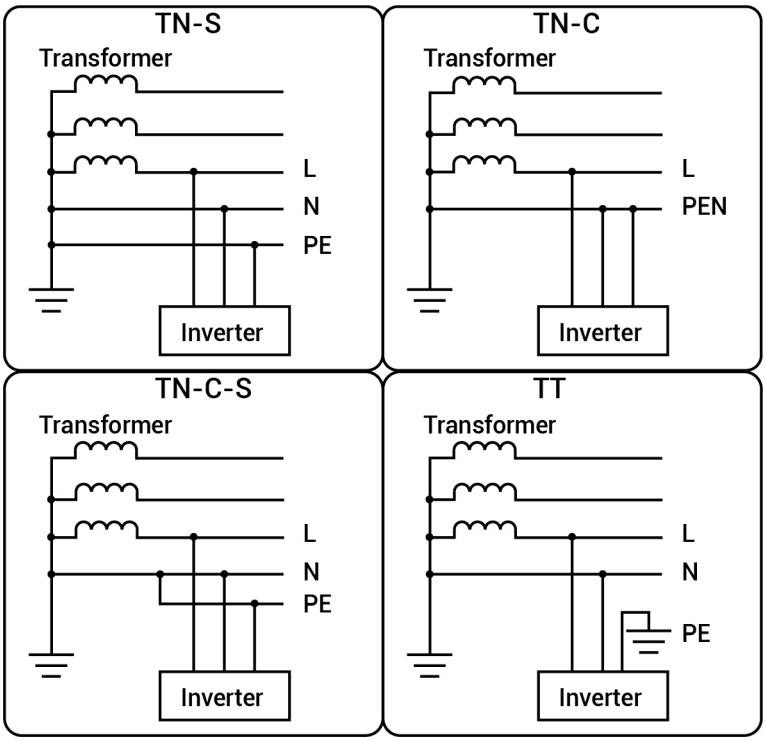

SVA1OV00002

2.4.2 Sigen Hybrid (3.0-12.0) TP2 Series

- Supported grid power modes are TN-S, TN-C, TN-C-S, TT and IT.
- When applied to the TT grid power mode, the voltage requirement for N to PE is less than 30 V.

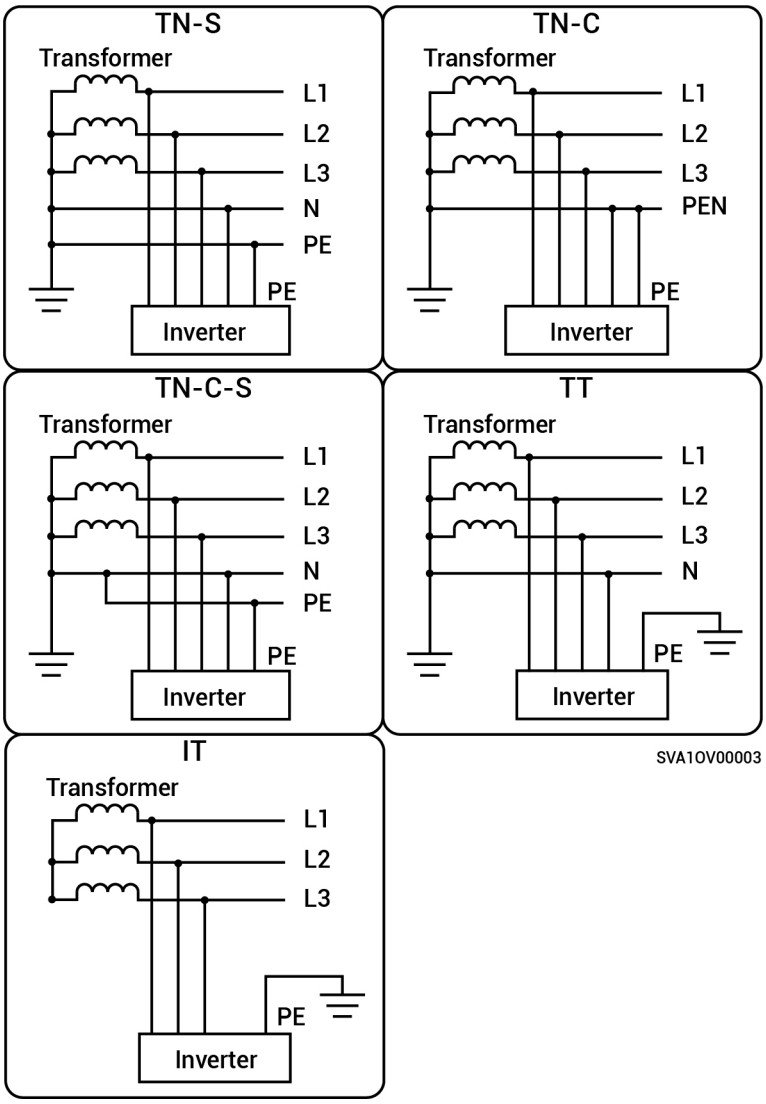

vietnamsolar.vn

2.5 Introduction to system wiring

2.5.1 PV System Wiring

Sigen Hybrid is designed for residential rooftop on-grid solar systems. The on-grid solar system consists of PV strings, inverters, distribution panels, and other components.

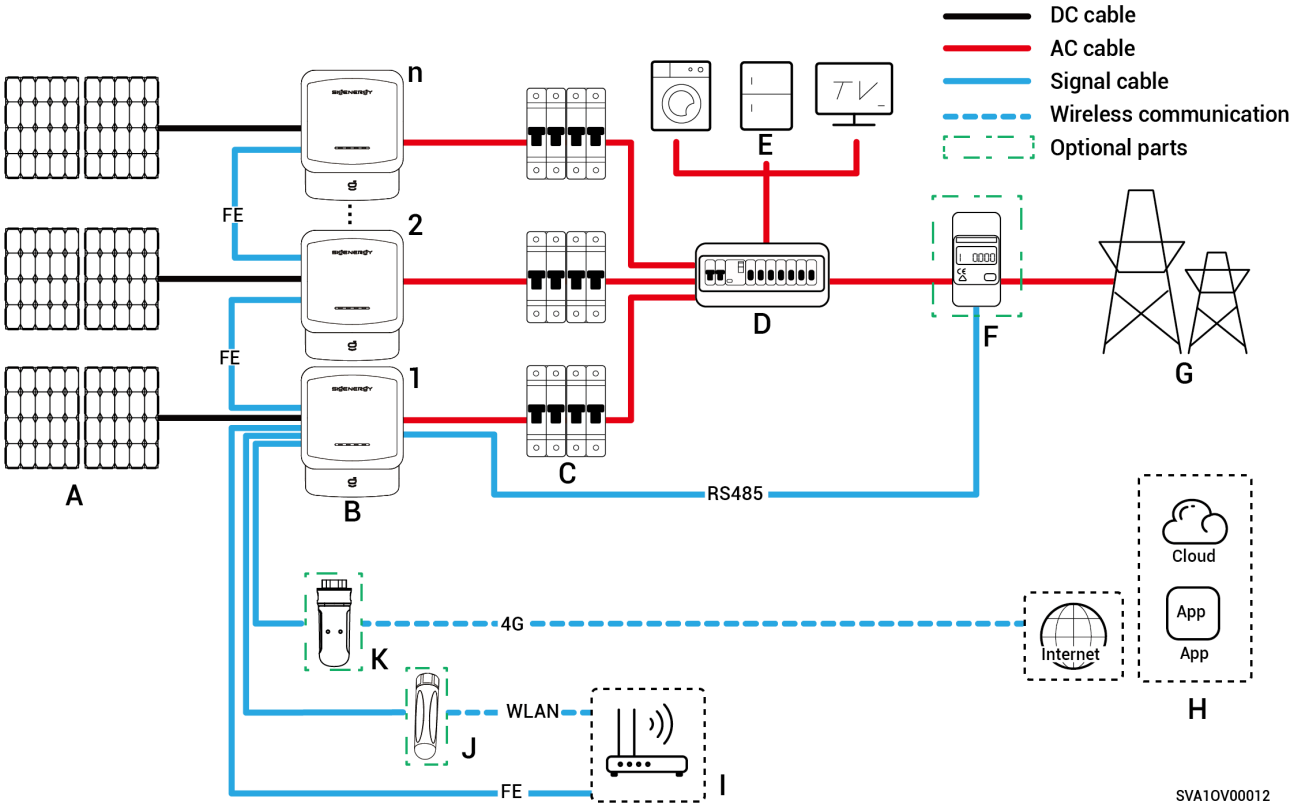

No.	Description	No.	Description	No.	Description
A	PV panel	B	Sigen Hybrid	C	AC switch
D	AC distribution panel	E	Household loads	F	Power sensor
G	Power grid	H	mySigen	I	Router
J	Antenna	K	CommMod		

- No more than 20 Sigen Hybrid units can be cascaded.
- The rated voltage of the AC switch connected to eachSigen Hybrid (2.0-6.0) SP2 seriesinverter must be ⩾ 240 Va.c., and the recommended rated current specifications are:
  - Sigen Hybrid (2.0-4.0) SP2 series: Rated current is 25 A.
  - Sigen Hybrid (4.6-6.0) SP2 series: Rated current is 40 A.
- The rated voltage of the AC switch connected to eachSigen Hybrid (3.0-12.0) TP2 series invertermust be ⩾ 415 Va.c., and the recommended rated current specifications are:
  - Sigen Hybrid (3.0, 4.0) TP2 series: Rated current is 10 A.
  - Sigen Hybrid (5.0, 6.0) TP2 series: Rated current is 16 A.

- Sigen Hybrid (7.5, 8.0) TP2 series: Rated current is 25 A.
- Sigen Hybrid (10.0, 12.0) TP2 series: Rated current is 32 A.

- If D (AC distribution panel) features leakage protection, it is recommended that the rated residual operating current be greater than or equal to the number of inverters × 100 mA.
- The distribution panel AC switch must have a rated voltage ⩾ 240 Va.c. and rated current ⩾ (Inverter maximum output current × Number of parallel units × 1.25)[1]
- It is recommended to use Fast Ethernet and WLAN for communication with inverters. When free 4G traffic of CommMod runs out, users must top up their accounts or replace an SIM card.

Note [1]: The maximum output current of an inverter can be found in its respective data sheet.

2.5.2 PV Storage System Wiring

- Our company’ s products can be used for Home energy storage system. The Home energy storage system consists of photovoltaic panels, inverters, battery packs, master control switches, Gateway, loads, power grids, etc.
- The main function of Home energy storage system is to store the direct current generated by photovoltaic panels into battery packs. Or alternatively, the electricity in the photovoltaic system and the battery pack can be converted into alternating current for use by the load or incorporated into the grid.

Tips

Under backup power system wiring, the duration of off-grid operation of the backup power load is related to the power supply capacity of the PV storage system. If there is an abnormality in the power supply of the PV storage system during off-grid operation (including but not limited to abnormal PV power generation, insufficient battery power, and abnormal power supplies to the diesel generator), the backup power load will still be unable to operate.

Whole home backup system wiring diagram

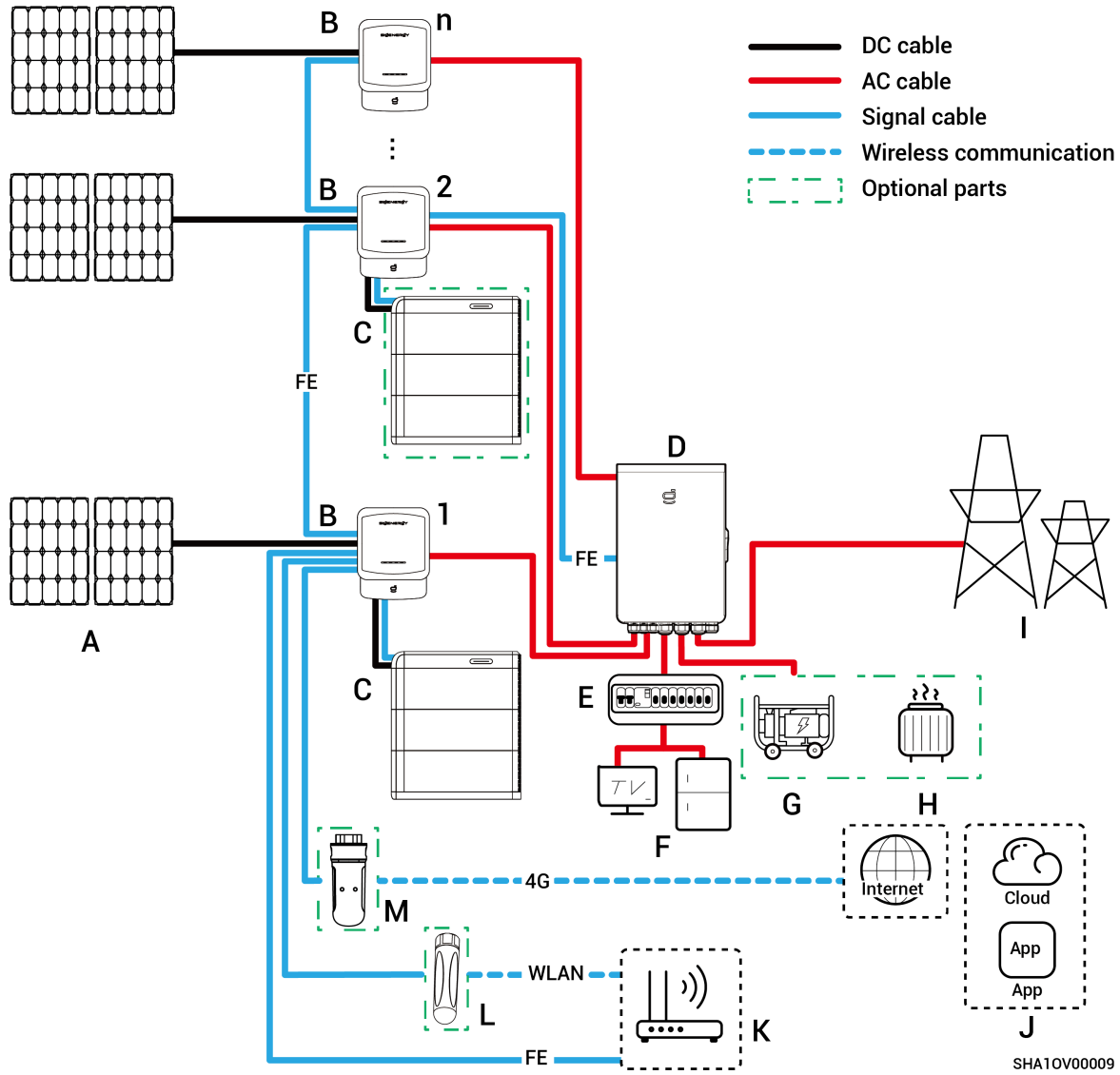

No.	Description	No.	Description	No.	Description
A	PV panel	B	Sigen Hybrid	C	SigenStor Energy Storage System (SigenStor BC+SigenStor BAT)
D	Gateway	E	Backup Distribution panel	F	Backup Household loads
G	Diesel generator	H	Smart loads	I	Power grid
J	mySigen	K	Router	L	Antenna
M	CommMod				

Tips

- No more than 20 Sigen Hybrid units can be cascaded.
- The Sigen Hybrid + SigenStor energy storage system supports connection to both Sigen Hybrid + SigenStor energy storage system configurations and standalone Sigen Hybrid systems.
- If F (backup household load) experiences leakage, it may pose a risk of electric shock. In order to avoid this hazard, a residual current device (RCD) must be installed between the D (Gateway) and the F (backup household load).
- As a backup energy source for long-term off-grid applications, the diesel generator can work in tandem with the Gateway to provide a smooth transition between PV, storage and diesel generation.
- All the power equipment in the owner's home can be connected as smart loads. To ensure that this product maximizes the benefits to users, it is recommended that the high-power equipment be connected as smart loads (heat pumps, pool heaters, clothes dryers, etc.), which can be cut off when the energy storage system has low power. Other low-power equipment are connected as household loads (lights, routers, etc.)
- It is recommended to use Fast Ethernet and WLAN for communication with inverters. When free 4G traffic of CommMod runs out, users must top up their accounts or replace an SIM card.

Partial home backup system wiring diagram

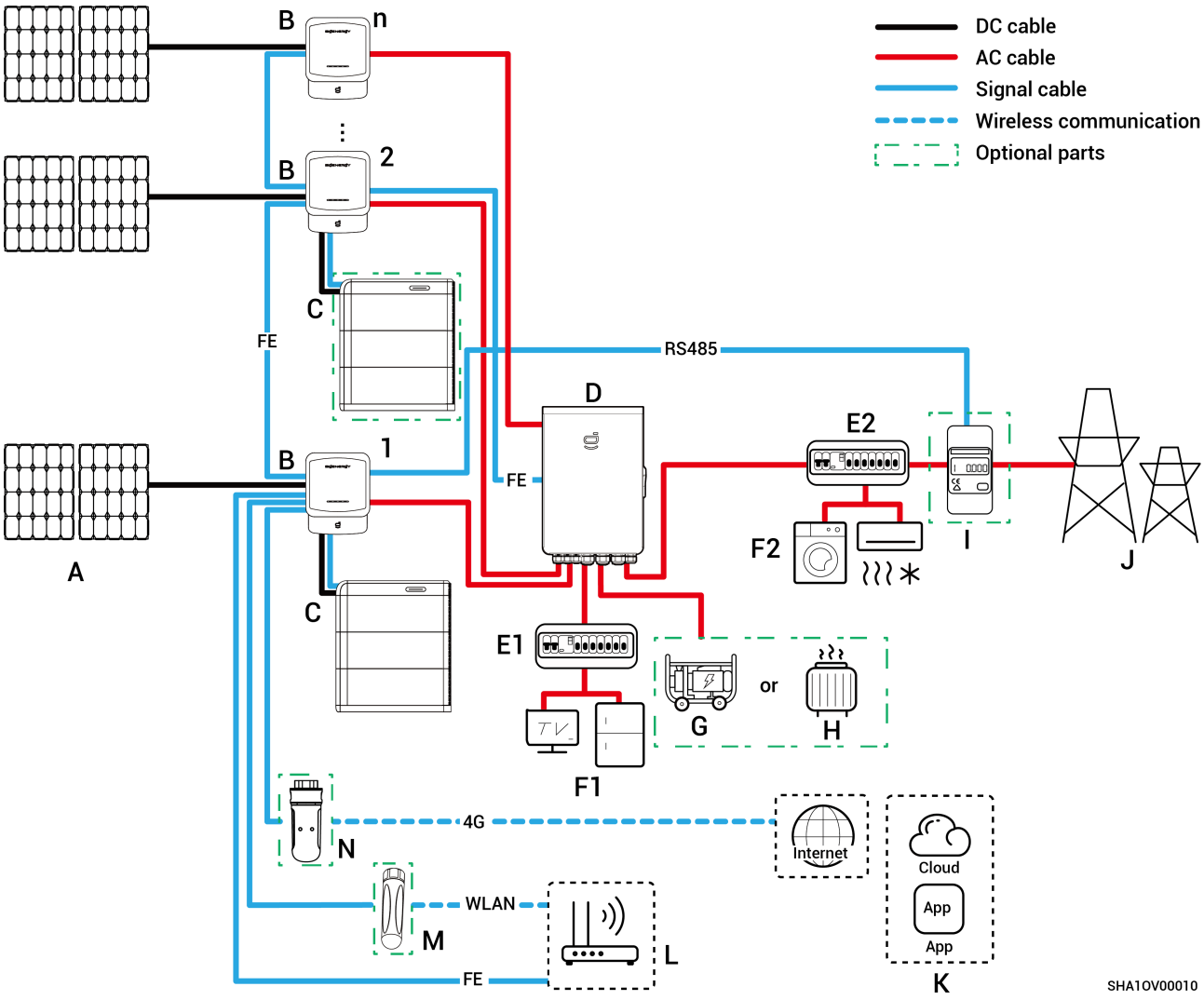

No.	Description	No.	Description	No.	Description
A	PV panel	B	Sigen Hybrid	C	SigenStor Energy Storage System (SigenStor BC+SigenStor BAT)
D	Gateway	E1	Backup Distribution panel	E2	Non-Backup Distribution panel
F1	Backup Household loads	F2	Non-Backup Household loads	G	Diesel Generator
H	Smart loads	I	Power sensor	J	Power sensor
K	mySigen	L	Router	M	Antenna
N	CommMod				

Tips

- No more than 20 Sigen Hybrid units can be cascaded.
- The Sigen Hybrid + SigenStor energy storage system supports connection to both Sigen Hybrid + SigenStor energy storage system configurations and standalone Sigen Hybrid systems.
- If E2 (non-backup distribution panel) features leakage protection, it is recommended that the rated residual operating current be greater than or equal to the number of inverters × 100 mA.
- If F1 (backup household load) experiences leakage, it may pose a risk of electric shock. In order to avoid this hazard, a residual current device (RCD) must be installed between the D (Gateway) and the F1 (backup household load).
- As a backup energy source for long-term off-grid applications, the diesel generator can work in tandem with the Gateway to provide a smooth transition between PV, storage and diesel power generation.
- All the power equipment in the owner's home can be connected as smart loads. To ensure that this product maximizes the benefits to users, it is recommended that the high-power equipment be connected as smart loads (heat pumps, pool heaters, clothes dryers, etc.), which can be cut off when the energy storage system has low power. Other low-power equipment are connected as household loads (lights, routers, etc.)
- Power sensor has the function of data acquisition for grid connection points enables zero-power grid connection. For partial home backup system wiring, Power sensor does not need to be configured. For partial backup power and zero-power grid connection control system wiring, Power sensor is configured.
- It is recommended to use Fast Ethernet and WLAN for communication with inverters. When free 4G traffic of CommMod runs out, users must top up their accounts or replace an SIM card.

Non-backup system wiring diagram

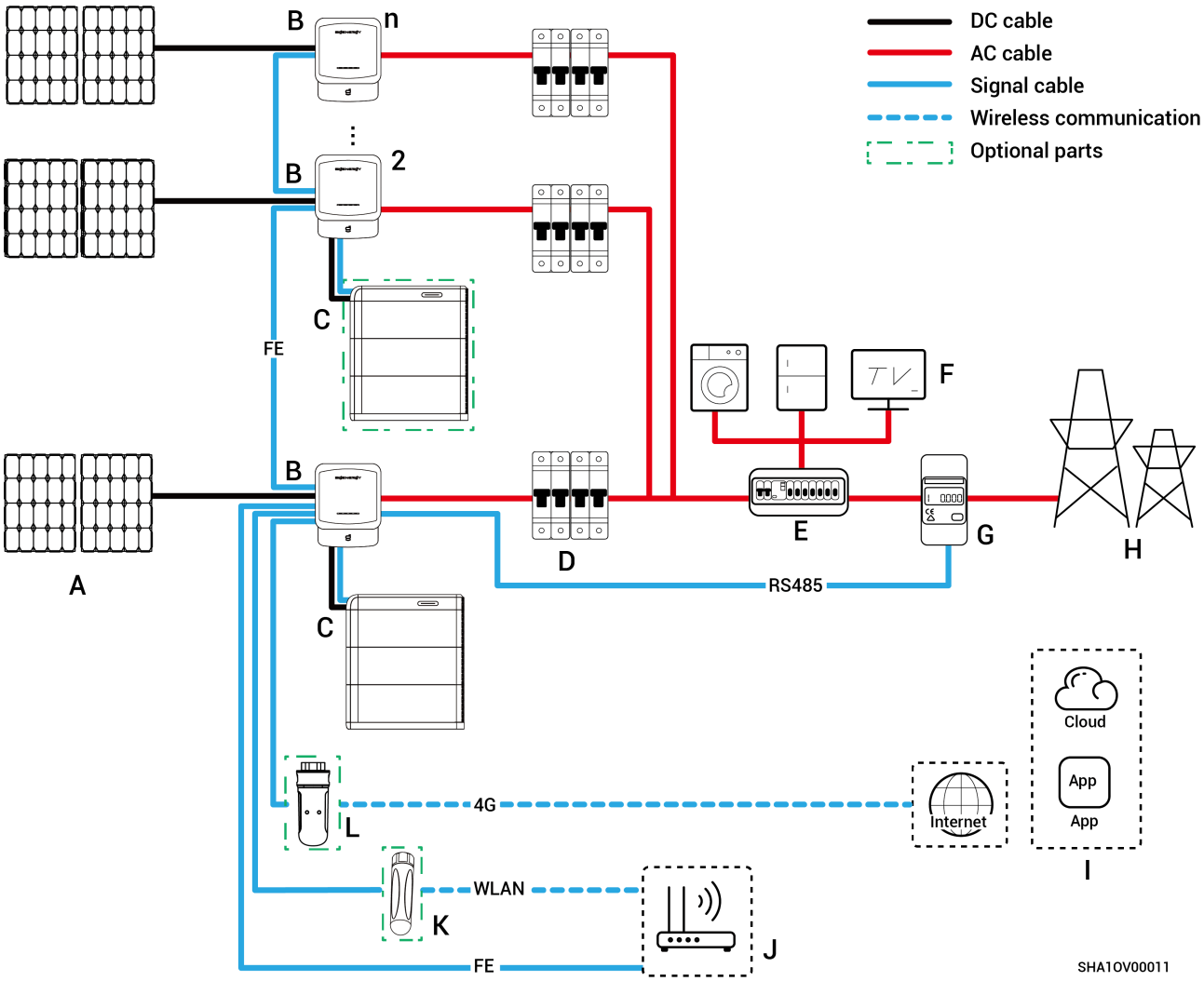

No.	Description	No.	Description	No.	Description
A	PV panel	B	Sigen Hybrid	C	SigenStor Energy Storage System (SigenStor BC+SigenStor BAT)
D	AC switch	E	Distribution panel	F	Household loads
G	Power sensor	H	Power grid	I	mySigen
J	Router	K	Antenna	L	CommMod

Tips

- No more than 20 SigenStor units can be cascaded.
- The Sigen Hybrid + SigenStor energy storage system supports connection to both Sigen Hybrid + SigenStor energy storage system configurations and standalone Sigen Hybrid systems.
- The rated voltage of the AC switch connected to eachSigen Hybrid (2.0-6.0) SP2 seriesinverter must be ⩾ 240 Va.c., and the recommended rated current specifications are:

Tips

- Sigen Hybrid (2.0-4.0) SP2 series: Rated current is 25 A.
- Sigen Hybrid (4.6-6.0) SP2 series: Rated current is 40 A.

- The rated voltage of the AC switch connected to eachSigen Hybrid (3.0-12.0) TP2 series inverter-must be ⩾ 415 Va.c., and the recommended rated current specifications are:
  - Sigen Hybrid (3.0, 4.0) TP2 series: Rated current is 10 A.
  - Sigen Hybrid (5.0, 6.0) TP2 series: Rated current is 16 A.
  - Sigen Hybrid (7.5, 8.0) TP2 series: Rated current is 25 A.
  - Sigen Hybrid (10.0, 12.0) TP2 series: Rated current is 32 A.
- If E (distribution panel) features leakage protection, it is recommended that the rated residual operating current be greater than or equal to the number of inverters × 100 mA.
- The distribution panel AC switch must have a rated voltage ⩾ 240 Va.c. and rated current ⩾ (Inverter maximum output current × Number of parallel units × 1.25)[1]
- It is recommended to use Fast Ethernet and WLAN for communication with inverters. When free 4G traffic of CommMod runs out, users must top up their accounts or replace an SIM card.

Note [1]: The maximum output current of an inverter can be found in its respective data sheet.

Chapter 3 Site Selection Requirements

Tips

- The equipment can be installed indoors and outdoors. Install the equipment in strict accordance with installation instructions given in this section and local laws and regulations.
- Before installing the equipment, please be sure to carefully read the following installation requirements. The company will not be liable for any functional abnormalities or damages arising from the operation of the equipment if the installation requirements are not followed, even in cases leading to personal safety incidents.
- During actual installation, the selection of the installation location should comply with local regulations, firefighting regulations, and other relevant laws. The specific installation location planning should be subject to the installer or engineering, procurement, and construction (EPC) contracts.

Installation Environment Requirements

- Do not install the equipment in a smoky, flammable, or explosive environment.
- Avoid exposing the equipment to direct sunlight, rain, standing water, snow, or dust. It is suggested to install the equipment in a sheltered place. Take preventive measures in operating areas prone to natural disasters such as floods, mudslides, earthquakes, and typhoons.
- Do not install the equipment in an environment with strong electromagnetic interference.
- The temperature and humidity of the installation environment should meet equipment requirements.
- The equipment should be installed in an area that is at least 500 m away from corrosion sources that may result in salt damage or acid damage. Corrosion sources include but are not limited to seaside, thermal power plants, chemical plants, smelters, coal plants, rubber plants, and electroplating plants.
- In areas with good marine environments (such as Norway, where the nearshore salinity is $\leqslant$ 28 psu), the mounting distance of the device from the coastline can be appropriately relaxed to $\geqslant$ 200 m.
- If the outer surface of the device is damaged, please repaint the device in time.

Installation Position Requirements

- Do not tilt the equipment or place it upside down. Ensure that the equipment is horizontally installed.
- Do not install the equipment in areas easily accessible to children.
- Do not install the equipment in a place with fire hazards or is prone to moisturizing.
- The equipment produces sound when it is operating. Please install the equipment in a place with appropriate distance at which there is no impact to daily work and life.
- Do not install the equipment in a sealed, poorly ventilated location without fire protection measures and inaccessible for firefighters.

- The equipment is hot when it is operating. If the equipment is installed indoors, please ensure good indoor ventilation and avoid significant indoor temperature rise by more than 3°C while the equipment is operating. Otherwise, the equipment will be derated.
- Do not install the equipment in mobile scenarios such as recreational vehicles, cruise ships, and trains.
- It is recommended to install the equipment in a location where you can easily access, install, operate, and maintain it, and view the indicator status.
- Do not place the equipment in the vehicle passage when installed in a garage to avoid collisions.

Mounting Surface Requirements

- Do not install the equipment on a flammable base.
- The installation base should meet the load-bearing requirement. Solid brick-concrete structures, concrete walls, and floors are recommended.
- The installation base should be flat, and the installation area should meet the installation space requirements.
- No plumbing or electrical alignments are allowed inside the installation base to avoid potential drilling hazards during equipment installation.
- The equipment base is made of aluminum. If the equipment is installed on a metallic substrate that is prone to electrochemical corrosion (such as high-chromium stainless steel, austenitic stainless steel, and nickel-plated steel), insulating gaskets must be fully installed between the equipment and the substrate. (Non-metallic insulating gaskets such as PC, PTFE, or PVDF can be used)

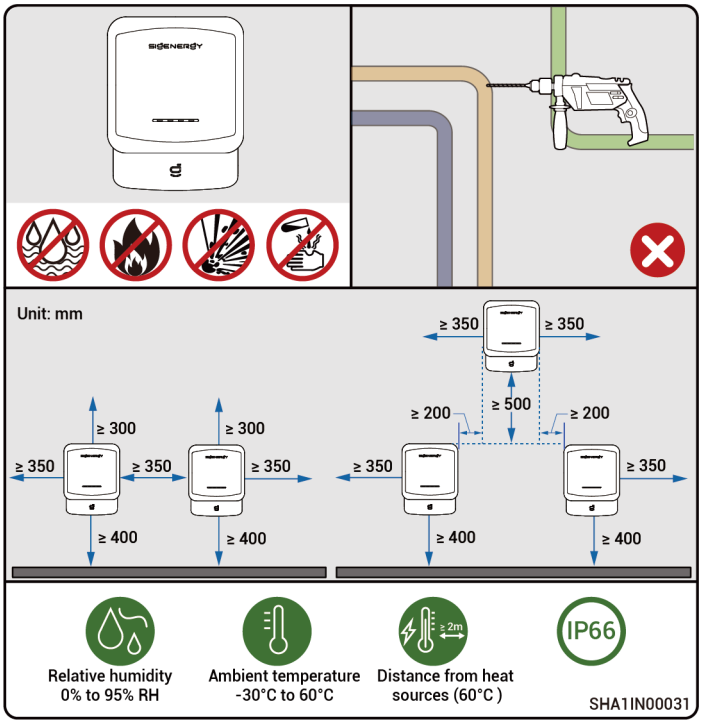

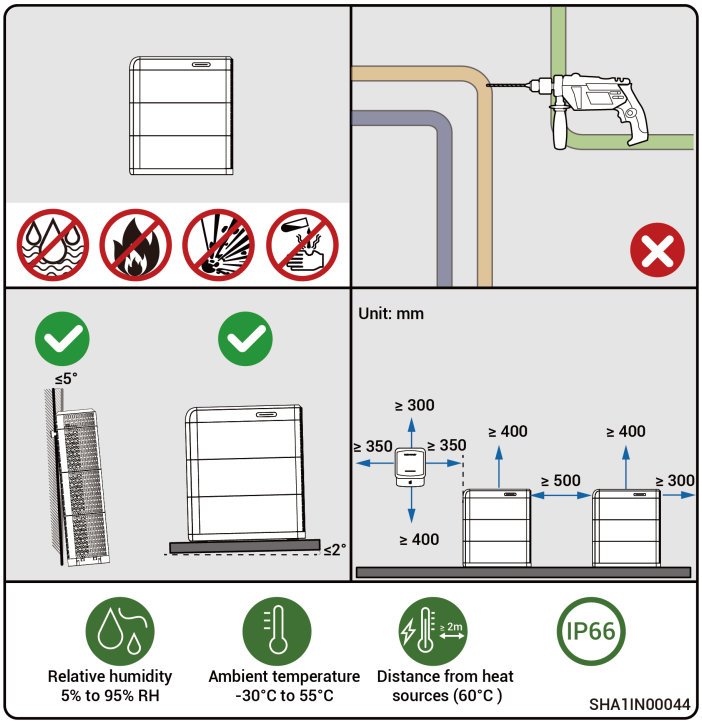

Tips

- The maximum operating temperature range applicable to the equipment is -20°C to 55°C, and the recommended optimal operating temperature range is 10°C ⩽ T ⩽ 35°C.
- When the battery pack temperature is below 0°C, immediate charging is not possible, and the battery pack (the built-in heating module can be automatically enabled) will activate the heating feature automatically. The best charging performance of the battery can be achieved after heating for less than 2 h. The heating feature will consume power.
- At a temperature > 40°C, the operation of the equipment may trigger a power derating that prevents the equipment from operating optimally. The higher the temperature, the shorter the service life of the equipment.

vietnamsolar.vn

Chapter 4 Equipment Installation and Wiring

- Only company authorized personnel should install and connect the equipment. For detailed operation methods, please refer to the installation guide corresponding to the device model.
- Parts and accessories supplied with the packing box are personal assets of the owner and must be kept safe.

Chapter 5 System Operation

5.1 Operational Mode

Tips

The energy storage system supports multiple working modes, Some countries support Load Shedding Mode, VPP Scheduling-evergen Mode, which is subject to the App interface display.

Sigen AI Mode

By obtaining local peak and valley electricity prices and weather data, combined with user electricity consumption habits, the Sigen AI Mode can customize intelligent electricity usage solutions to maximize customers' cost savings.

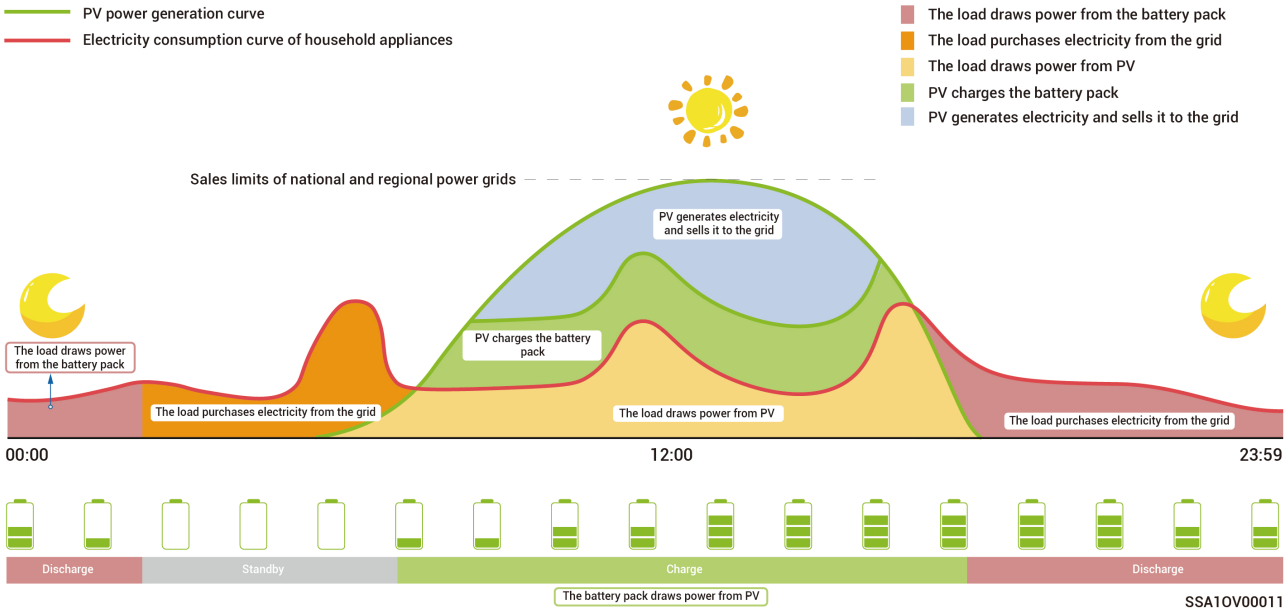

Self-Consumption Mode

- When there is sufficient solar power, the electric energy generated by the PV system will first be used to power the loads, with any excess energy being stored in the batteries. Any remaining surplus energy will be sold to the grid. When there is insufficient solar power, the batteries will release electric energy to loads. By increasing the self-consumption ratio of the PV system and improving the self-sufficiency ratio of household energy, you can effectively save on your electric bills.
- This mode is suitable for areas with high electricity prices or zero-power grid connection restrictions.

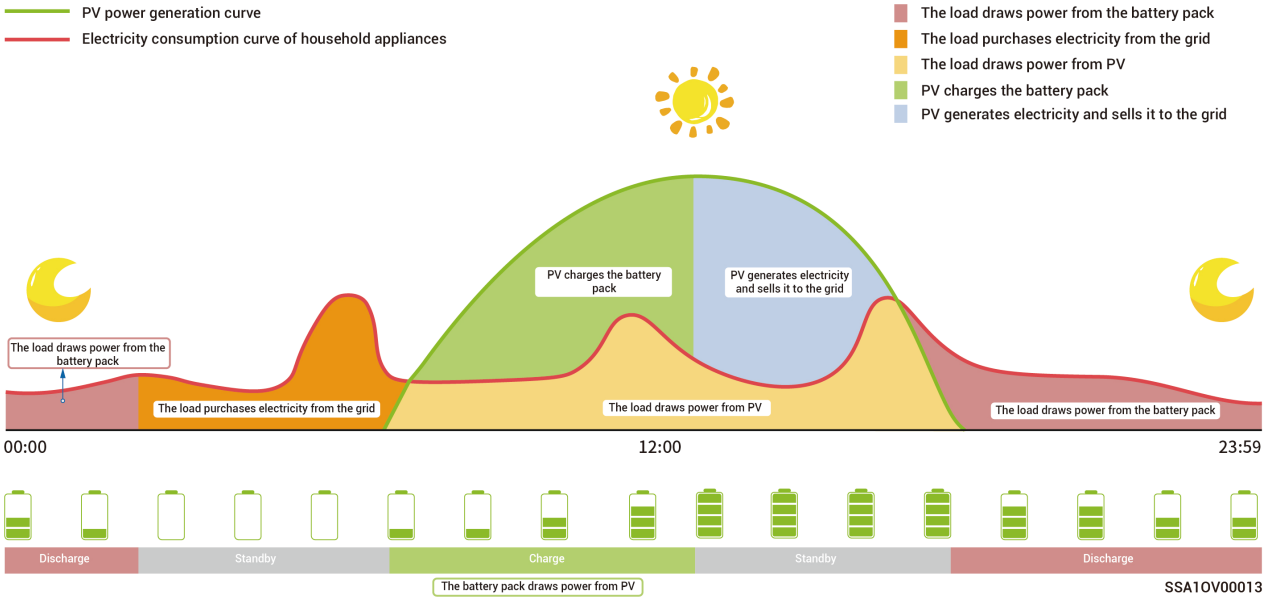

Time-based Control Mode

- The charging period, discharging period, and self-consumption period need to be set manually.When electricity prices are high, the surplus power from photovoltaic power generation and battery power can be sold to the grid, and the battery can be charged during periods of low electricity prices to save electricity bills.
- If no period is set, the energy storage system will be in standby mode without discharging. The photovoltaic power will prioritize supplying the load, and the surplus power will be used for charging energy storage system.*
- Up to 24 charging and discharging or self-consumption periods can be set.
- It is suitable for areas with peak and valley electricity prices and significant price differences. *When entering this period, the battery capacity will be recorded. When the photovoltaic power is greater than the load, the remaining photovoltaic power will charge the battery. When the photovoltaic power is less than the load, the battery can be discharged to the load. However, when the battery capacity decreases and approaches the battery capacity value when entering this period, the battery will stop discharging.

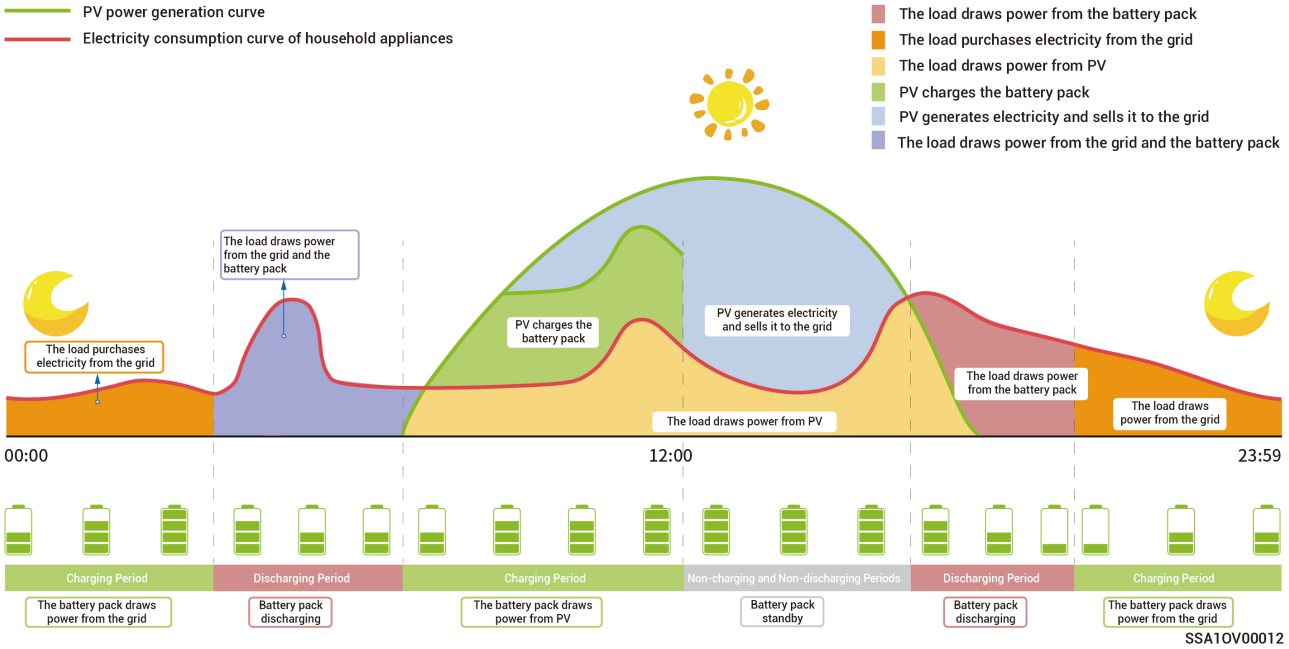

Fully Fed to Grid Mode

- You can sell excess energy back to the grid and earn credits on your energy bill.
- In the daytime, when the PV power is greater than the maximum output capacity of the inverter, the inverter maintains the maximum output while storing excess energy in the batteries. When the PV power is lower than the maximum output capacity of the inverter or there is no PV power in the nighttime, the batteries are discharged to ensure that the inverter maximizes the output.

VPP Scheduling-evergen Mode

Once registered with the VPP, your storage system will join the smart dispatching network. The App will show and auto-enable this mode.

Remote EMS Mode

After setting to this mode will allows a third-party EMS to schedule parameters related to the power station and the product set by the company. Do not enter or exit this mode without the installer's confirmation.

Load Shedding Mode

In areas with frequent power outages, you can add your region and schedule in this mode, and the system will fully charge the battery in advance as scheduled, ensuring that you have battery power available to supply the load during outages. (currently only supported in South Africa)

5.2 Backup power setup

Tips

- Skip this section if no Gateway is configured.
- Users can manually set this parameter according to the power interruption frequency of their regions and leave time.

If there is a gateway in your networking, you can manually set the "Backup Reserve" value in the mySigen App. In grid connection mode, the battery stops discharging when the backup power SOC setting is reached. In the event of grid power outage, the backup power becomes available.
For example, the backup power SOC is set in Self-Consumption Mode.

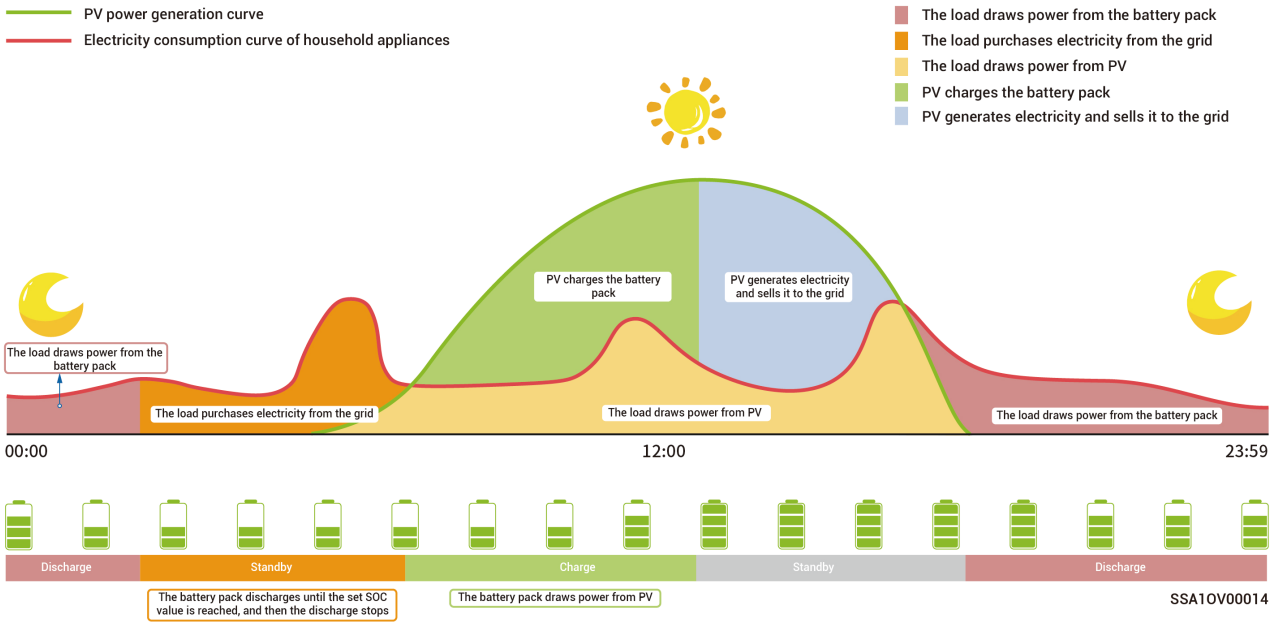

5.3 Peak Shaving Control Mode

- The electricity bill in some regions is calculated as follows: Total electricity bill = Cost at peak power + cost for electricity usage + other costs. Wherein, peak power refers to the maximum power imported from the grid. This mode is suitable for areas with peak and valley electricity prices and significant price differences.
- The Peak Shaving function can be used with all working modes, configuring the maximum peak power drawn from the grid to reduce the maximum peak power drawn from the grid during peak periods, thereby lowering the electricity bill.

Example 1: Self-Consumption Mode Settings for Peak Shaving

Assume that the peak shaving SOC is set to 50% and the maximum peak power is 2kW. Because Total electricity bill = Cost at peak power + cost for electricity usage + other costs. Wherein, peak power refers to the maximum power imported from the grid. After Self-Consumption Mode is set to Peak Shaving, the power purchased from the grid drops from 5 kW to 2 kW, so the total electricity bill is reduced.

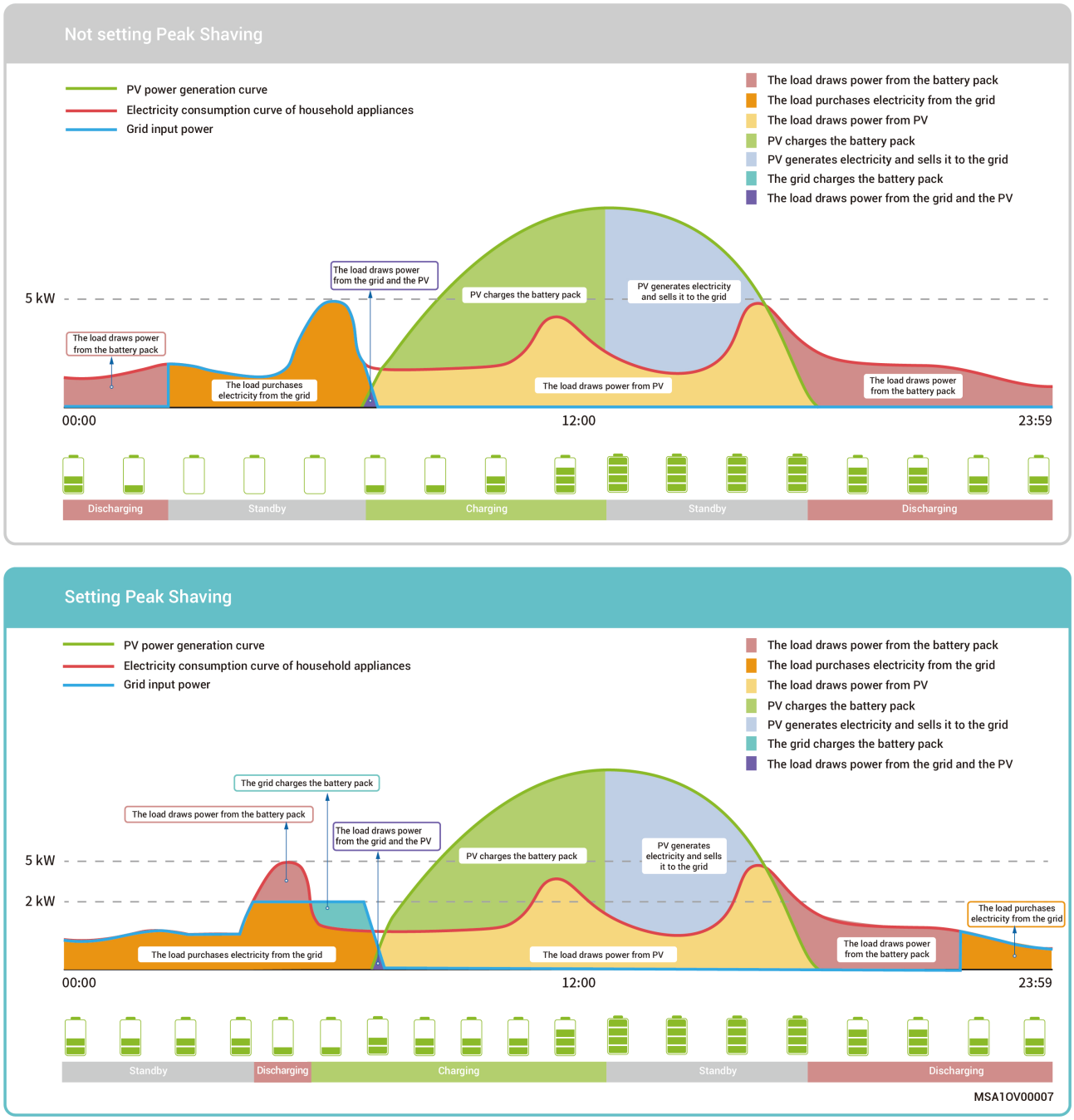

Example 2: Time-based Control Mode Settings for Peak Shaving

Assume that the peak shaving SOC is set to 50% and the maximum peak power is 2kW. Because Total electricity bill = Cost at peak power + cost for electricity usage + other costs. Wherein, peak power refers to the maximum power imported from the grid. After Time-based Control Mode is set to Peak Shaving, the power purchased from the grid drops from 5 kW to 2 kW, so the total electricity bill is reduced.

Not setting Peak Shaving

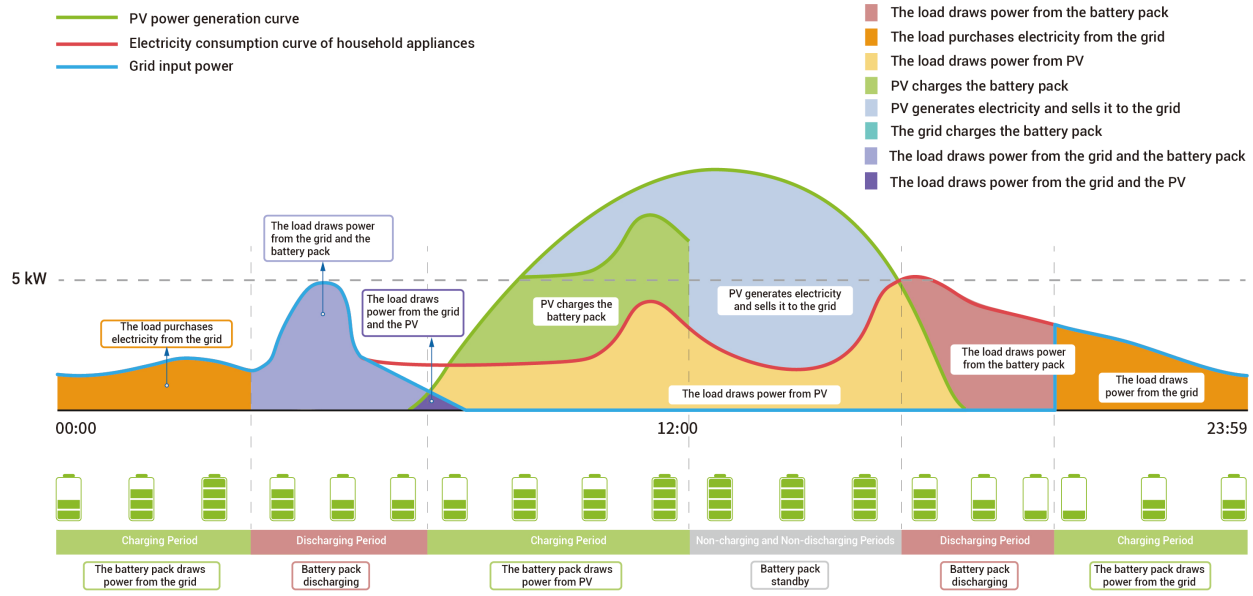

Setting Peak Shaving

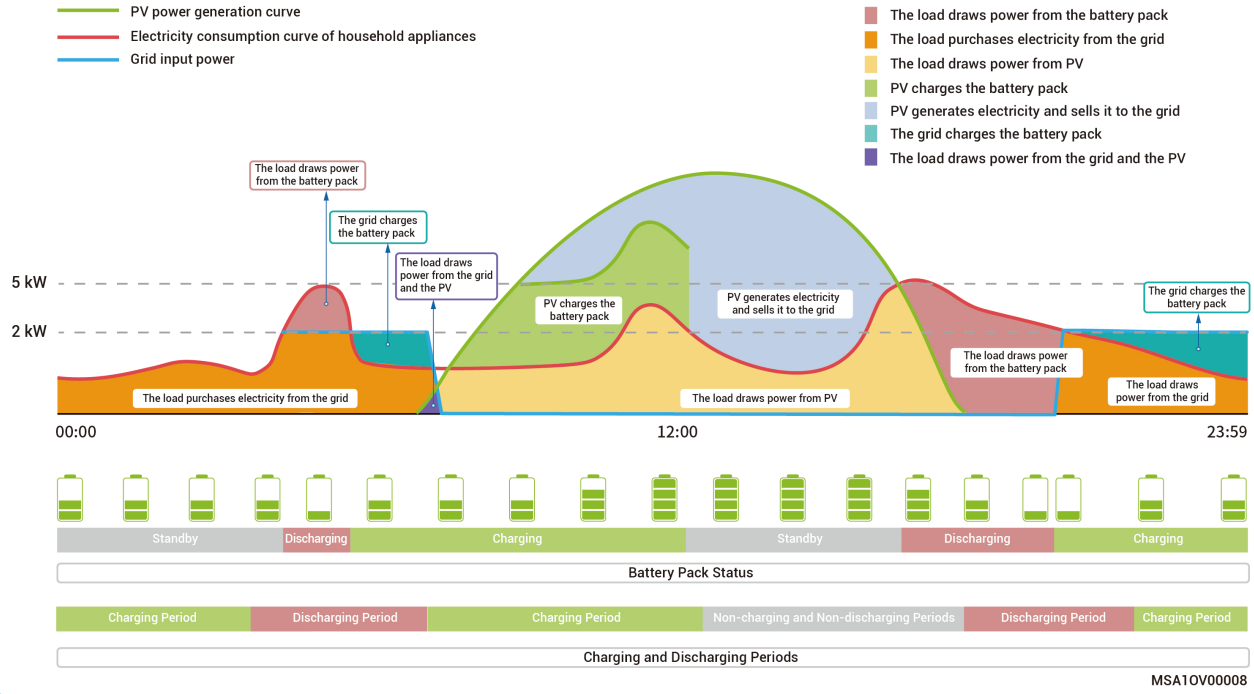

vietnamsolar.vn

5.4 LED Indicator State

Inverter

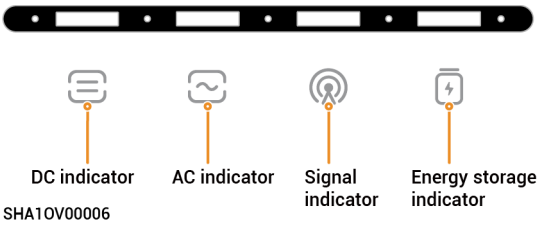

Indicator	Color	Status	Meaning
		Steady on	The DC side has been connected, but is not running.
		Steady on	The DC side is running.
		Off	The DC side is not connected.
		Blink	The DC side fails.
		Steady on	The inverter fails.
		Steady on	The AC side has been connected, but is not running.
		Steady on	Running in an on-grid state.
		Steady on	Running in an off-grid state.
		Off	The AC side is not connected.
		Blink	Running with overload in an off-grid state.
		Blink	The AC side fails.
		Steady on	The inverter fails.
		Off	The management system is not connected.
		Blink	The near-end APP has been connected.
		Steady on	The management system has been connected via FE or WLAN.
		Steady on	The management system has been connected via 4G.
		Blink	Insufficient traffic for Sigen CommMod.
		Steady on	All SigenStor BATs have been connected, but are not running.
		Blink	SigenStor BAT is being charged.
		Blink	SigenStor BAT is being discharged.
		Off	All SigenStor BATs are dormant or not connected.
		Blink	Part of SigenStor BATs fail.
		Steady on	All SigenStor BATs fail.

SigenStor Energy Storage System

Tips

The indicator correctly indicates the real-time power and status of the battery rack.

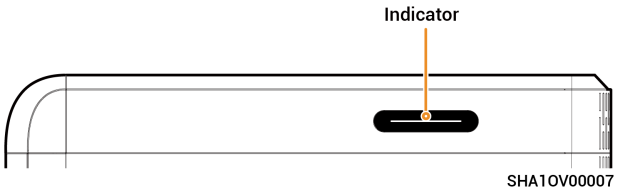

Color	Status	Meaning
	Steady on	Battery rack in standby mode.
	Breathing blink	Charging.
	Breathing blink	Discharging.
	Steady on	The communication between the battery cluster and the inverter is abnormal.
	Breathing blink	The SigenStor BC communication is abnormal.
	Steady on	Equipment failure.

CommMod Indicator

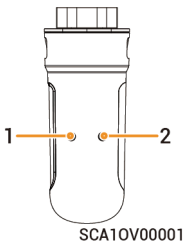

S/N	Name	State	Description
1	Power indicator	-	-
2	Network state indicator	• Slow flashing (200 ms on/1800 ms off) • Slow flashing (1800 ms on/200 ms off) • Quick flashing (125 ms on/125 ms off)	• The network is being connected • Standby. • Data is being transferred.

vietnamsolar.vn

5.5 mySigen App Query and Setting

The App can be downloaded in the following two ways. For details, see **mySigen App User Manual**.





vietnamsolar.vn

Chapter 6 System Maintenance

6.1 Routine Maintenance

To ensure the long-term operating of the equipment, you are advised to perform routine maintenance according to this section.

Inspection content	Inspection method	Power off or not	Maintenance cycle
System cleaning	Regularly check whether the equipment is covered and dirty. Clean it up when necessary. Do not use tools that may cause electric shock or with damaged insulation when cleaning up, such as wire brushes.	Yes	Once every three months.
System operating state	• Check whether the equipment is damaged or deformed. • Listen for any abnormal noises during the operation of the equipment. • When the equipment is running, check whether the equipment parameters are correctly set.	No	Once every six months.

6.2 Equipment Power-on/Power-off

Scheme 1: App operation

In the mySigen app, tap "Settings" to turn the device on or off.

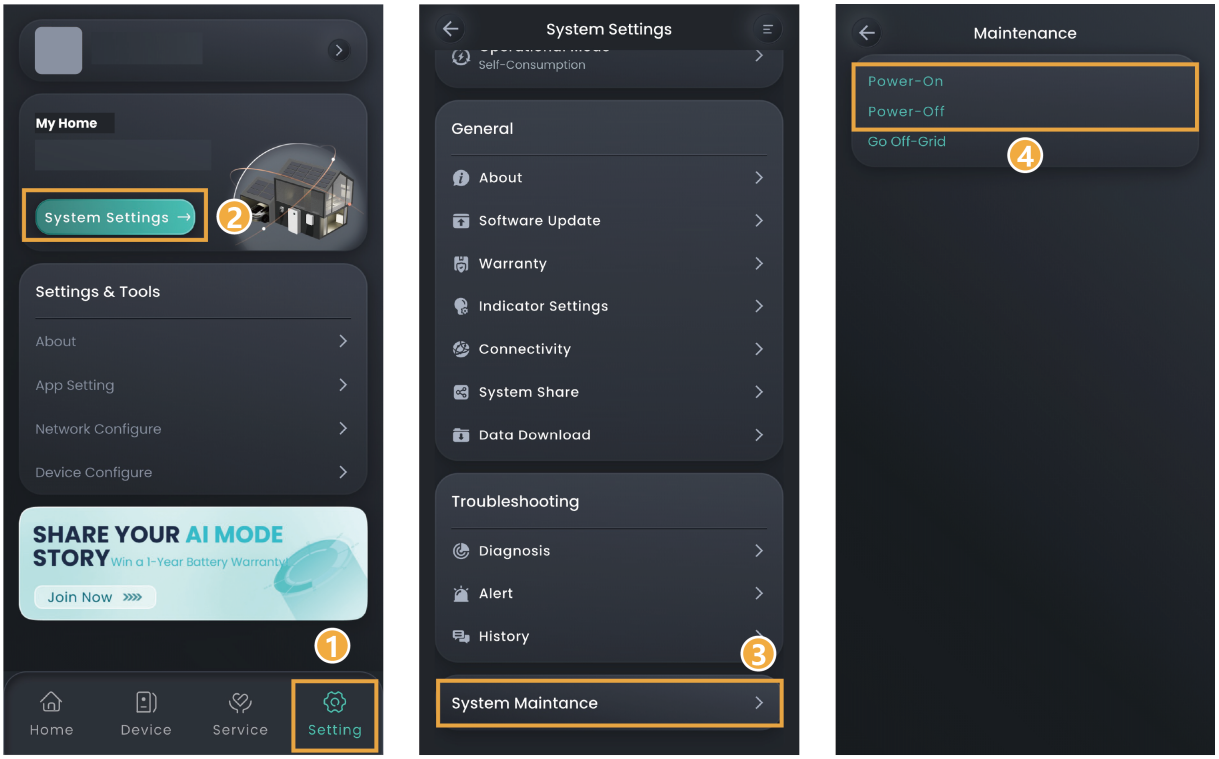

MSA1IN00001

Tips

Major firmware upgrades can fail if the equipment is not connected to the internet for an extended period of time. When your device is not connected to the internet, the system issues periodic notifications. If the disconnection persists beyond 90 consecutive days, the system will automatically engage in safe operating mode for safety compliance. Reconnect to the internet immediately. For unresolved issues, feel free to contact us.

vietnamsolar.vn

6.3 Low SOC

The self-discharge characteristic of battery pack will cause power loss. If the equipment is not charged for a long time, it may be damaged due to overdischarge of power. When the battery is low, charge the equipment in time.

Under normal circumstances, the equipment can charge itself according to the running condition. If the equipment cannot be charged, please contact your sales agent in time and deal with it within the specified time. If the battery capacity is lost or irreversible damage is caused due to the delay, the company will not be liable.

- When the battery power is greater than or equal to 10%, charge within 30 days
- When the battery power is less than or equal to 0% and less than 10%, charge within 7 days

Scenarios that may cause a charge failure (including but not limited to) :

- The PV side has no input, and the power grid side is powered off for a long time.
- The equipment is faulty.
- Parameters are not set correctly.

6.4 Emergency Treatment

Emergency in case of Fire

Danger

- Please shut down the equipment or disconnect the main power switch when it is safe.
- The high temperature may distort or damage the battery pack, resulting in electrolyte overflow or toxic gas leakage. Do not go near the battery pack and wear protective equipment.
- If the fire is small, use carbon dioxide or ABC dry powder extinguisher to extinguish the fire.
- If the fire is spreading, evacuate the building or equipment area immediately and call the fire department. Re-entry to burning buildings is prohibited.
- Do not touch or come into contact with high voltage components during fire fighting, due to the risk of electric shock.
- After extinguishing the fire, do not use the equipment, please contact your installer or sales representative.

Emergency in case of Flood

Danger

- Please shut down the equipment or disconnect the main power switch when it is safe.
- If the battery pack is submerged, do not touch it to avoid the danger of electric shock.
- After the flood waters recede, do not use the equipment. Please contact your installer or sales representative.

Emergency in case of Battery Pack Malfunctions

Danger

- When the battery pack has abnormal odor, electrolyte leakage, or heat, do not touch it, and contact professional personnel immediately. Professionals must wear protective equipment such as goggles, rubber gloves, gas masks, and protective clothing to protect themselves.
- The electrolyte is corrosive and contact may cause skin irritation or chemical burns. In case of accidental contact with the electrolyte, take the following measures immediately:
  - Inhalation: Evacuate the contaminated area, keep fresh air circulating, and seek immediate medical help.
  - Eye contact: Flush eyes with plenty of water for at least 15 minutes. Do not rub eyes. Seek medical help immediately.
  - Skin contact: Wash the contact area with plenty of soapy water and seek medical help immediately.
  - Ingestion: Induce vomiting and seek medical help immediately.

Danger

- Do not continue to use abnormal battery packs, please contact your installer or sales representative.

Emergency in case of Battery Pack Drops or Impacts

- If there is an obvious odor, smoke, or fire, keep away from the equipment immediately and contact professional personnel.
- Do not use the battery pack if it has been dropped or hit. Please contact your installer or sales representative.

vietnamsolar.vn

Chapter 7 Technical Parameter

For details about equipment parameters, see the Data sheets of the product.