VIỆT NAM SOLAR
vietnamsolar.vn

Sigen PV (50–110)M1-HYB Series Installation Guide

Version: Draft F
Release date: 2026-03-06

vietnamsolar.vn

Caution

- **Trained or experienced electrical personnel are required to operate the equipment.**
- **Operators should be familiar with national and local laws, regulations, and standards, and the compositions and operating principles of relevant systems.**
- **Please read carefully the operating requirements and precautions in this document and "Important Notice" before operating. Failure to do so may result in damage to the equipment that is not covered by the warranty.**

1 Product Introduction

1.1 Appearance and Dimensions

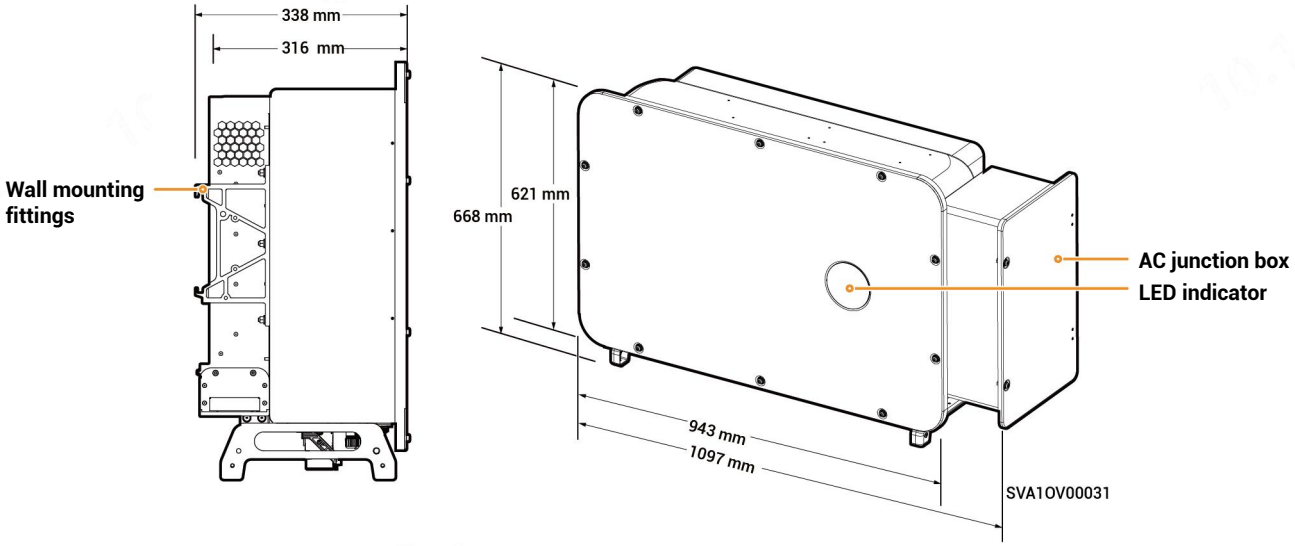

1.2 Port Descriptions

Tips

There are two types of port appearances; please refer to the actual product received.

Style 1

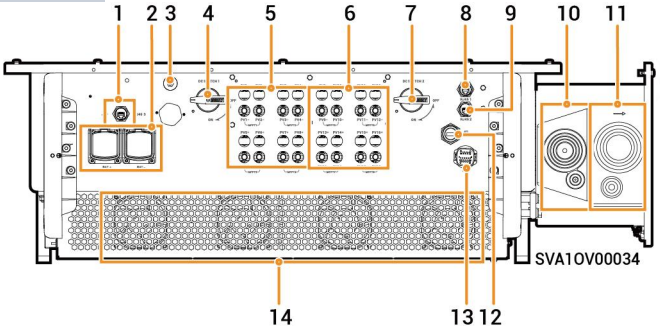

S/N	Name	Marking
1	SigenStack network interface	RJ45 3
2	SigenStack DC cable interface	BAT+/BAT-
3	Antenna interface	ANT
4	DC switch 1	DC SWITCH 1
5	DC input terminal group 1 (Controlled by DC SWITCH 1)	PV1 to PV8
6	DC input terminal group 2 (Controlled by DC SWITCH 2)	PV9 to PV16
7	DC switch 2	DC SWITCH 2
8	Network interface	RJ45 1
9	Network interface	RJ45 2
10	(Optional) Wire-in port of backup loads	-
11	Wire-in port of power grid	-
12	Sigen CommMod interface	4G
13	Communication interface	COM
14	Cooling fan	-

Style 2

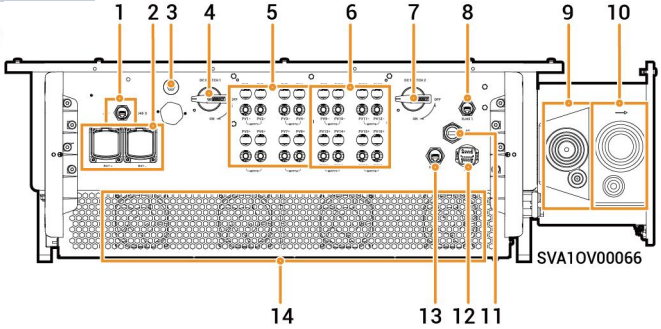

S/N	Name	Marking
1	SigenStack network interface	RJ45 3
2	SigenStack DC cable interface	BAT+/BAT-
3	Antenna interface	ANT
4	DC switch 1	DC SWITCH 1
5	DC input terminal group 1 (Controlled by DC SWITCH 1)	PV1 to PV8
6	DC input terminal group 2 (Controlled by DC SWITCH 2)	PV9 to PV16
7	DC switch 2	DC SWITCH 2
8	Network interface	RJ45 1
9	(Optional) Wire-in port of backup loads	-
10	Wire-in port of power grid	-
11	Sigen CommMod interface	4G
12	Communication interface	COM
13	Network interface	RJ45 2
14	Cooling fan	-

2 Pre-installation Check

- **Check whether the components are entirely supplied against the packing list and whether the appearance is in good condition. For any problem, contact your sales representative.**
- **Parts and accessories supplied with the packing box are personal assets of the owner and must not be taken away from the installation site.**
- **Check personal protective equipment and installation tools to ensure that they are complete; If not, please make them up.**
- **Check and ensure the completeness of personal protective equipment and installation tools; replenish if necessary.**

Protective equipment


Safety hat


Goggles


Dust mask


Protective gloves


Insulating gloves


Insulating shoes

Installation tool

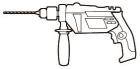
Power drill


Tape measure

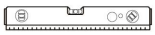
Level


Marker


Rubber mallet


Scissors


Cable tie

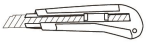
Utility knife


Fire-proof sealant


Vacuum cleaner

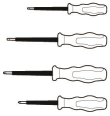
Insulation screwdriver set

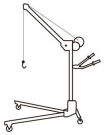
Lift


Flexible braided flat tape (bearing: ≥400 kg Diameter: 6 mm)


Insulation sleeve set


Torque socket wrench


Insulated Torx L-shaped Wrench (T-30)


Wire cutter


Wire stripper


Multimeter


Insulation impedance tester

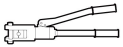
Crimp tool


Cold - pressed Terminal Crimping Pliers

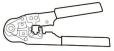
Network cable pliers


Crimping pliers


Heat shrinkable sleeve

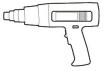
Heat gun


Open-end wrench (model: H4TW0008 Manufacturer: Amphenol)


Crimping pliers (model: H4TC0003 Manufacturer: Amphenol)

Installer-provided cable

Caution

- **The specifications of the Installer-provided cable must comply with the cable regulations and standards of the country or region standards.**
- **L1, L2, L3, N and PE should be connected to other equipment in sequence without mixing.**

S is the cross-sectional area of the AC cable conductor, and Sp is the cross-sectional area of the protective ground cable conductor.

No.	Cable name	Recommended specification
1	Protective grounding cable[1]	Outdoors single-core copper flexible cable Cross-sectional area of cables: Sp ≥ S/2
2	DC cable	Outdoor photovoltaic cable Cross-sectional area of core conductor: 4–6 mm² Outer diameter: 5.9–8.8 mm
3	Network cable	Outdoor eight-conductor shielded twin-twisted pair cable Cross-sectional area of conductor: 0.13–0.2 mm² Cable OD: 4–7.5 mm Single cable length: ≤ 800 m[2]
4	Signal cable	Outdoor two-core shielded twisted pair Cross–sectional area of core conductor: 0.5–0.75 mm² (multi–core flexible conductor, Tubular terminal needed) 0.5–1 mm² (single–strand hard conductor, no tubular terminal needed) Outer diameter: 4.5–6.5 mm Single cable length: ≤ 1000 m[2] Baud rate: ≤ 9600 bps
5	Power cable between inverter and BC-BST/BC	Cable specifications refer to the "SigenStack Energy Storage System Installation Guide".
6	Signal cable between inverter and BC-BST/BC	Cable specifications refer to the "SigenStack Energy Storage System Installation Guide".

Note [1]: The Sp value in this table is valid only when the conductor material of the protective ground cable and the AC output cable is the same. Otherwise, the protective ground cable conductance should be equivalent to that specified in this table by selecting an appropriate cable conductor cross-sectional area. The specifications of the protective ground cable are determined by this table or calculated in accordance with IEC 60364-5-54.
Note [2]: The cable length should be limited for good communication. Too long cable degrades the communication effect.

7 Recommended Specifications for AC Cables

Tips

- **The following tables are recommended based on 1 circuit situation.**
- **If connecting to our company's Gateway, the AC cable supports a maximum of 300 mm².**

Application Scenario	Model Number	Port Type	Cable Specification @ 380V/400V		Cable Specification @ 480V	
			Recommended Copper Wire Cross - sectional Area	Recommended Aluminum Wire Cross - sectional Area	Recommended Copper Wire Cross - sectional Area	Recommended Aluminum Wire Cross - sectional Area
When HYB model is not configure with an Gateway	Sigen PV 50M1-HYB Sigen PV 50M1-HYB-AU	Grid Port	70 mm²	95 mm²	50 mm²	70 mm²
		Load Port	25 mm²	35 mm²	16 mm²	25 mm²
	Sigen PV 60M1-HYB	Grid Port	95 mm²	120 mm²	70 mm²	95 mm²
		Load Port	35 mm²	50 mm²	25 mm²	35 mm²
	Sigen PV 80M1-HYB	Grid Port	150 mm²	185 mm²	95 mm²	120 mm²
		Load Port	50 mm²	70 mm²	35 mm²	50 mm²
	Sigen PV 99.9M1-HYB-AU Sigen PV 100M1-HYB	Grid Port	150 mm²	185 mm²	95 mm²	120 mm²
		Load Port	70 mm²	95 mm²	50 mm²	70 mm²
	Sigen PV 110M1-HYB Sigen PV 110M1-HYB-AU	Grid Port	150 mm²	185 mm²	95 mm²	120 mm²
		Load Port	95 mm²	120 mm²	70 mm²	95 mm²

7 Recommended Specifications for AC Cables

Tips

- **If connecting to our company's Gateway, the AC cable supports a maximum of 95 mm².**
- **If larger specification aluminum wires are used, it is necessary to adapt with transition copper bars or larger specification MCCBs.**

Application Scenario	Model Number	Port Type	Cable Specification @ 380V/400V		Cable Specification @ 480V	
			Recommended Copper Wire Cross - sectional Area	Recommended Aluminum Wire Cross - sectional Area	Recommended Copper Wire Cross - sectional Area	Recommended Aluminum Wire Cross - sectional Area
When HYB model is configure with an Gateway	Sigen PV 50M1-HYB Sigen PV 50M1-HYB-AU	Grid Port	25 mm²	35 mm²	16 mm²	25 mm²
	Sigen PV 60M1-HYB		35 mm²	50 mm²	25 mm²	35 mm²
	Sigen PV 80M1-HYB		50 mm²	70 mm²	35 mm²	50 mm²
	Sigen PV 99.9M1-HYB-AU Sigen PV 100M1-HYB		70 mm²	95 mm²	50 mm²	70 mm²
	Sigen PV 110M1-HYB Sigen PV 110M1-HYB-AU		95 mm²	/	70 mm²	95 mm²

Tips

Recommended specifications for cables connecting power sensors to Distribution panel and to the grid, as well as step-by-step instructions for wiring, can be found in the accompanying documentation for each respective model.

VIỆT NAM SOLAR
vietnamsolar.vn

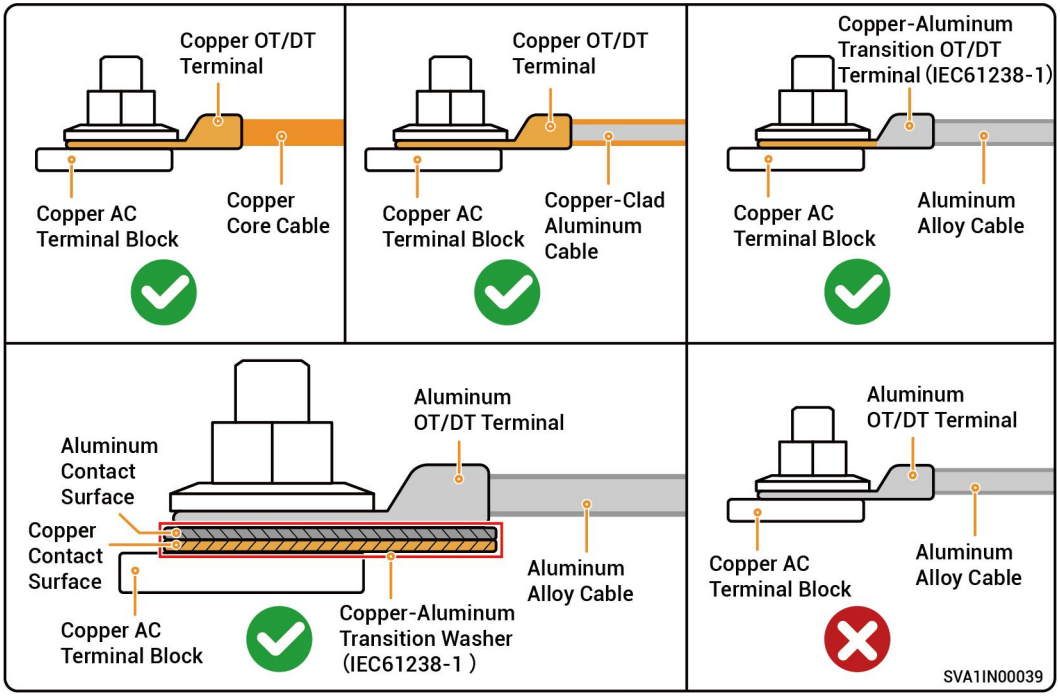

3 Site Selection Requirements

Tips

- **Before installing the equipment, please be sure to carefully read the following installation requirements. The company will not be liable for any functional abnormalities or damages arising from the operation of the equipment if the installation requirements are not followed, even in cases leading to personal safety incidents.**
- **During actual installation, the selection of installation location should comply with local firefighting, environmental protection regulations, and other relevant laws. The specific installation location planning should be subject to the installer or engineering, procurement, and construction (EPC) contracts.**

Installation environment

- Do not install the equipment in smoky, flammable, or explosive environments.
- Avoid exposing the equipment to direct sunlight, rain, standing water, snow, or dust. Install the equipment in a sheltered place. Take preventive measures in operating areas prone to natural disasters such as floods, mudslides, earthquakes, and typhoons.
- Do not install the equipment in an environment with strong electromagnetic interference.
- Ensure that the temperature and humidity of the installation environment comply with the equipment's requirements.
- The equipment should be installed in an area that is at least 500 m away from corrosion sources that may result in salt damage or acid damage (corrosion sources include but are not limited to seaside, thermal power plants, chemical plants, smelters, coal plants, rubber plants, and electroplating plants).
- In areas with good marine environments (such as Norway, where the nearshore salinity is ≤ 28 psu), the mounting distance of the device from the coastline can be appropriately relaxed to ≥ 200 m.
- If the outer surface of the device is damaged, please repaint the device in time.

Installation position

- Do not tilt or overturn the equipment to ensure that it is installed horizontally.
- Do not install the equipment in places with fire or damp.
- Do not install the equipment in a sealed, poorly ventilated location without fire protection measures and difficult access for firefighters.
- The equipment is hot when it is running. If the equipment is installed indoors, please ensure good indoor ventilation and avoid significant indoor temperature rise by 3° C while the equipment is running. Otherwise, the equipment will be derated.
- Do not install the equipment in mobile scenarios such as RVS, cruise ships, and trains.
- You are advised to install the equipment in a location where you can easily access, install, operate, maintain it, and view the indicator status.
- The recommended length for the AC cable between the inverter and the upstream transformer should be ≤ 600 meters. If the length exceeds 600 meters, it may affect the parallel operation of the inverters. Please contact Sigenergy for further advice.

Mounting surface

- Do not install the equipment on a flammable installation base.
- The installation base should meet the load–bearing requirement. Solid brick–concrete structures, concrete walls are recommended.
- The surface of the installation base must be smooth and the installation area must meet the installation space requirements.
- No water or electricity is routed inside the installation base to prevent drilling hazards during equipment installation.

VIỆT NAM SOLAR
vietnamsolar.vn

Tips

- To ensure optimal performance of the device, it is suggested that the installation distance between the device and surrounding obstacles be planned with reference to the diagram. If the installation site is well-ventilated, the optimal solution may be deployed based on actual conditions.
- To facilitate subsequent maintenance (such as routine inspection or disassembly of the fan), it is suggested that a clearance of at least 400 mm be reserved on the left side of the device.

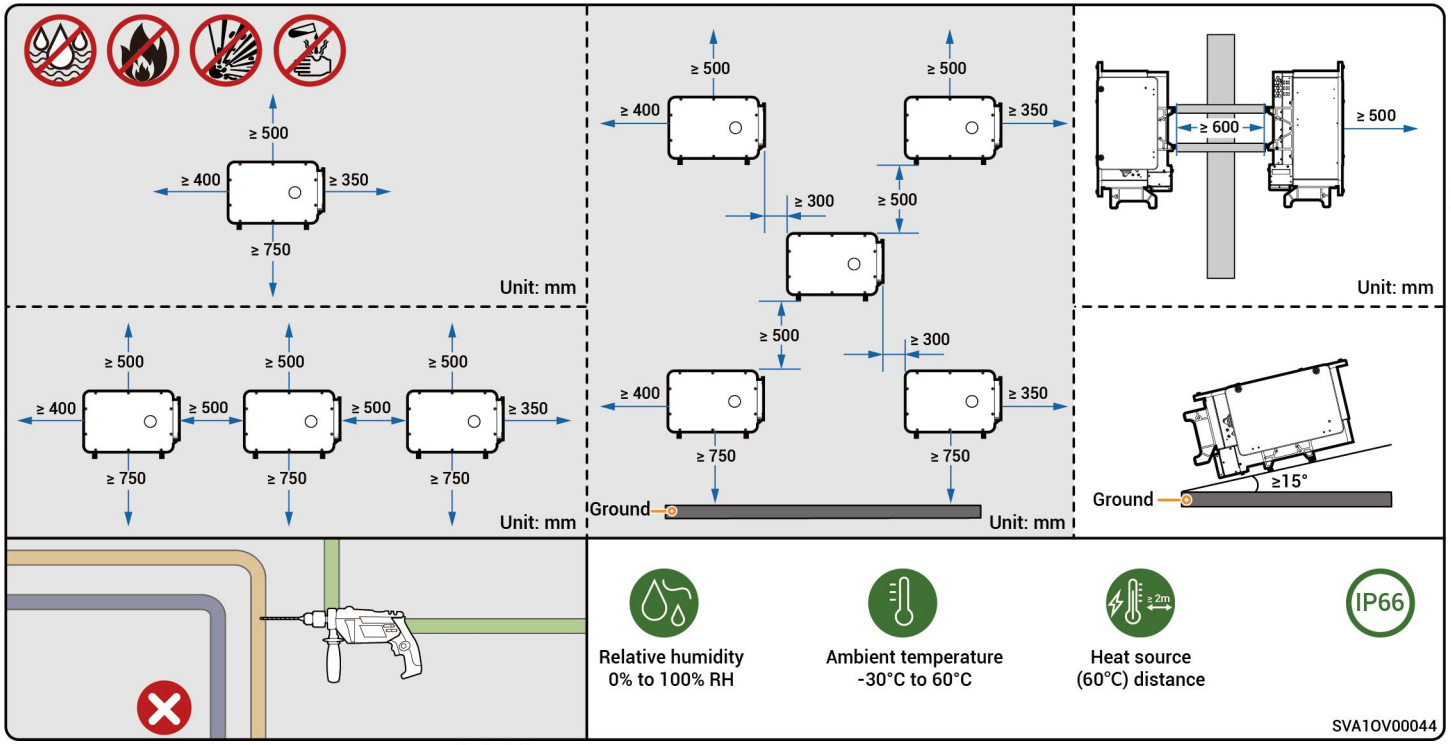

VIỆT NAM SOLAR
vietnamsolar.vn

PV-storage installation scenario

Tips

- **To ensure optimal performance of the device, it is suggested that the installation distance between the device and surrounding obstacles be planned with reference to the diagram. If the installation site is well-ventilated, the optimal solution may be deployed based on actual conditions.**
- **To ensure unobstructed access for installation tools (such as lifting tools or forklifts), it is suggested that a clearance of at least 1500 mm be reserved in front of the battery cluster, which may be adjusted based on actual conditions.**
- **After installation, please ensure that there is no water accumulation at the bottom of the device, and add drainage channels if necessary.**

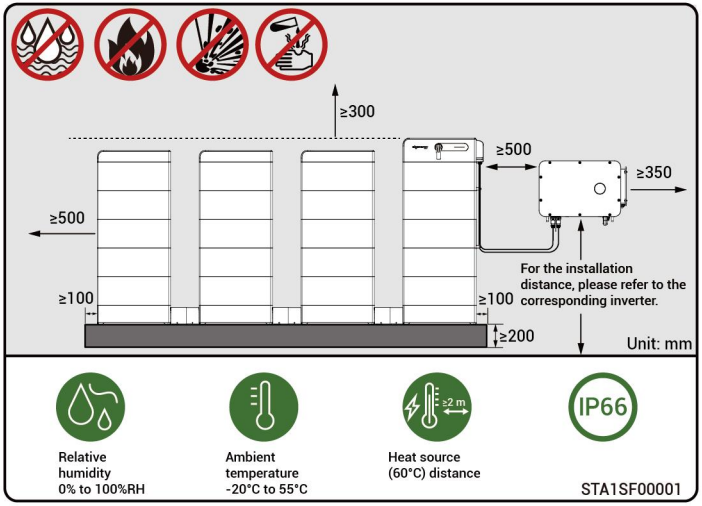

Mounting Space (top view)

In this scenario, select a wall that meets the requirements based on the fire resistance rating defined by local codes.

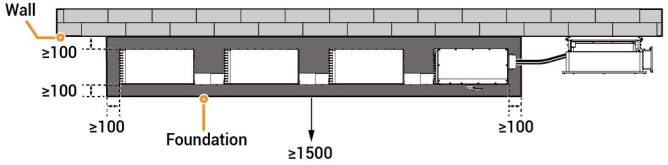

In this scenario, when the inverter is installed with its back against the battery stack and the inverter installation height is lower than the battery stack, a metal partition needs to be added when installing the inverter to avoid derating due to heat transfer between the inverter and BAT during operation. The metal separator must meet load-bearing requirements.

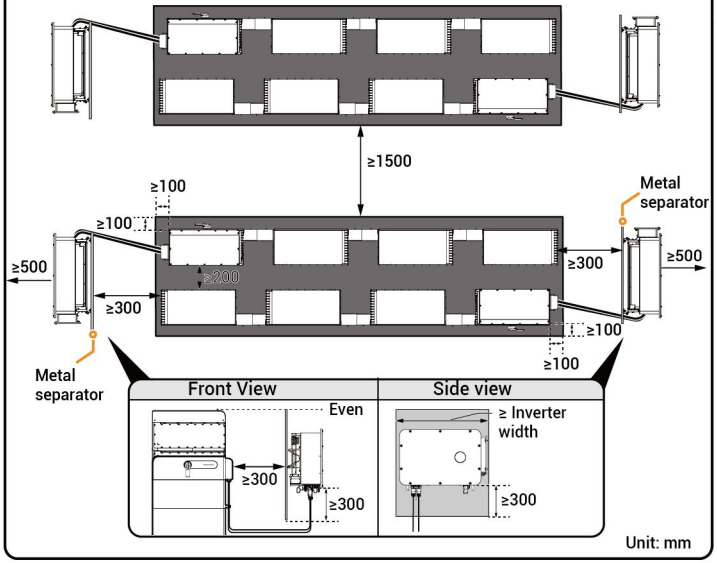

4 Installation

4.1 Transport the inverter

Tips

- **Keep the inverter balanced while handling to avoid personal injury.**
- **No load is allowed on the ports and terminals at the bottom of the inverter. Do not touch the ports and terminals directly with the ground or other supports.**
- **Put foam or cardboard under the inverter before placing the inverter on the ground to avoid damage to the casing.**
- **Lift the inverter and move it to the installation site instead of dragging it.**

4.2 Wall Mounting

1

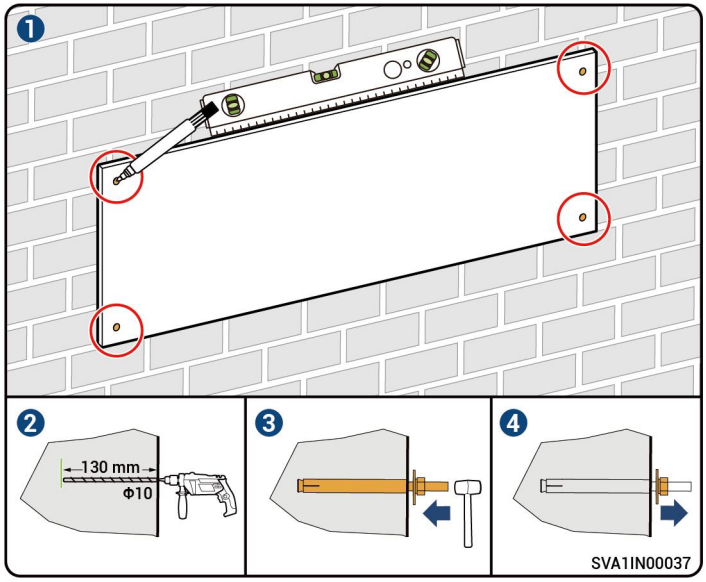

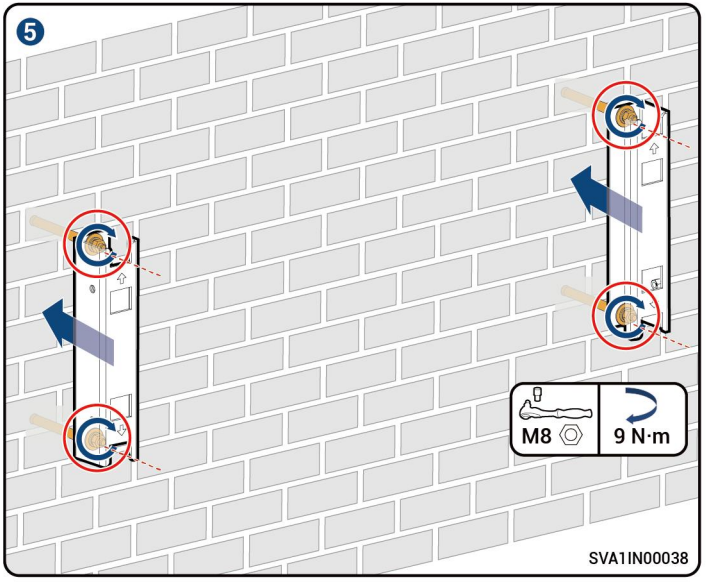

VIỆT NAM SOLAR
vietnamsolar.vn

2

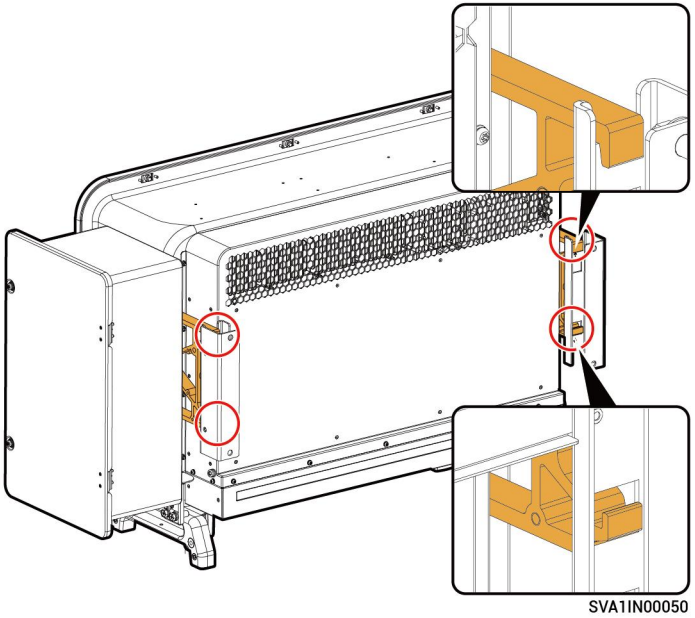

3 (optional)

Tips

To prevent equipment theft, this step may be performed.

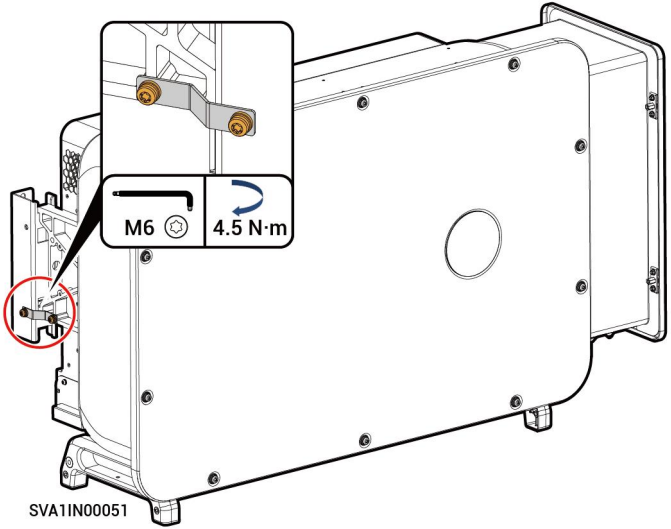

VIỆT NAM SOLAR
vietnamsolar.vn

4 (Optional)

Tips

If the owner receives an installation package with a protective cover, this step needs to be performed. If not, please ignore this step.

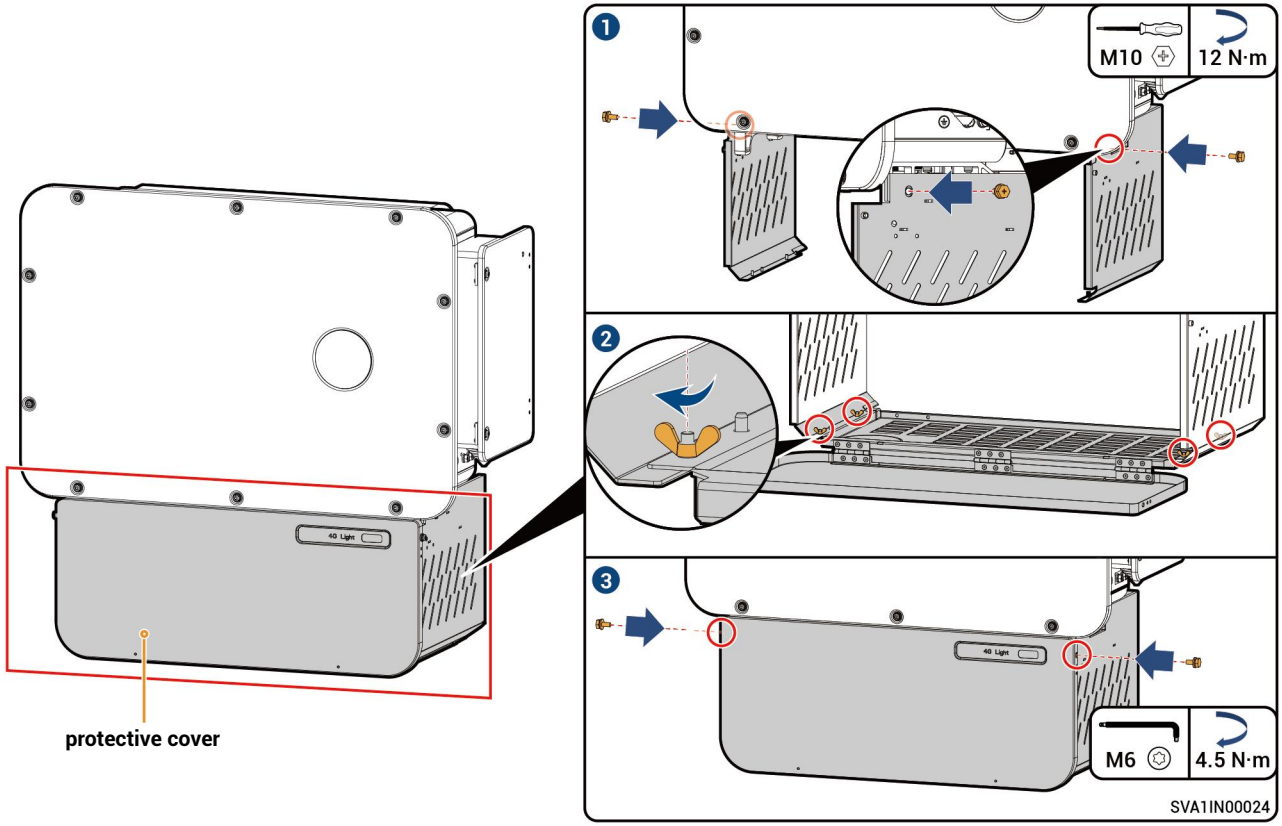

4.3 Support mounting

Caution

- **If this method is used to install the device, a sunshade shelter must be built above the device.**
- **The crossarm drilling dimensions for ground tilt installation and crossarm installation are the same, and the figure takes crossarm Installation as an example.**

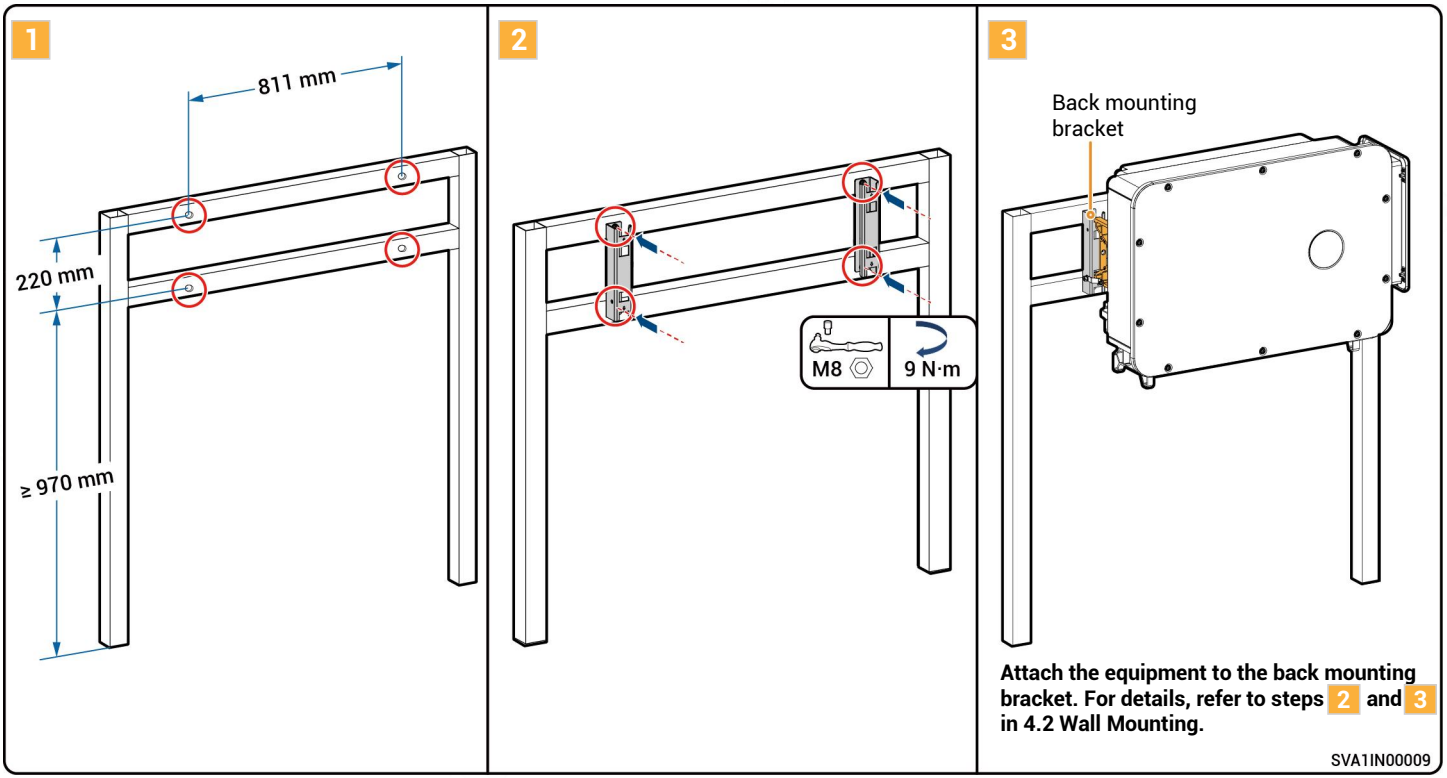

4.4 Pole-clamp mounting

Caution

If this method is used to install the device, a sunshade shelter must be built above the device.

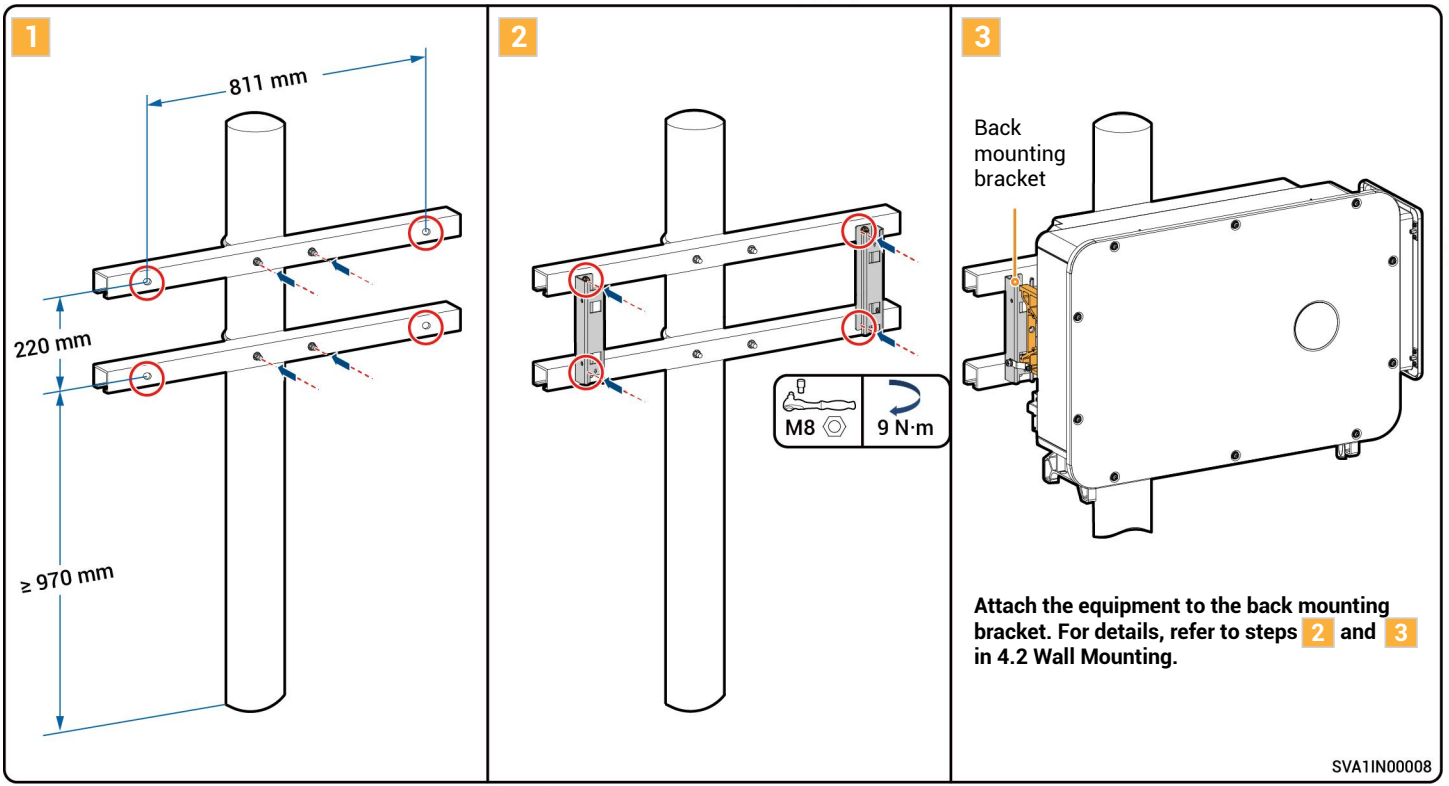

5 Cable Connection and Component Installation

5.1 Interface Relationship

Danger

- **Before connecting cables, ensure that DC SWITCH is in the OFF state, and the front switch of the AC line is off.**
- **Do not perform operations on the equipment with power on. Before operation, please make sure all power supplies to the equipment have been disconnected, including but not limited to the grid side, inverter and generator power switches.**
- **The cable colors in the figure are used only to distinguish different lines. The cable colors are based on actual conditions. Bind the power cable separately from the signal cable.**
- **Do not leave construction residues, for example, cut cores of cables, in or around the equipment, such as, in terminals and in or around fans.**
- **Only models with a backup load port can directly connect to the backup load. Models without a backup load port must first connect to Gateway, which then interfaces with the backup load.**
- **There are two types of port appearances; please refer to the actual product received.**

Style 1

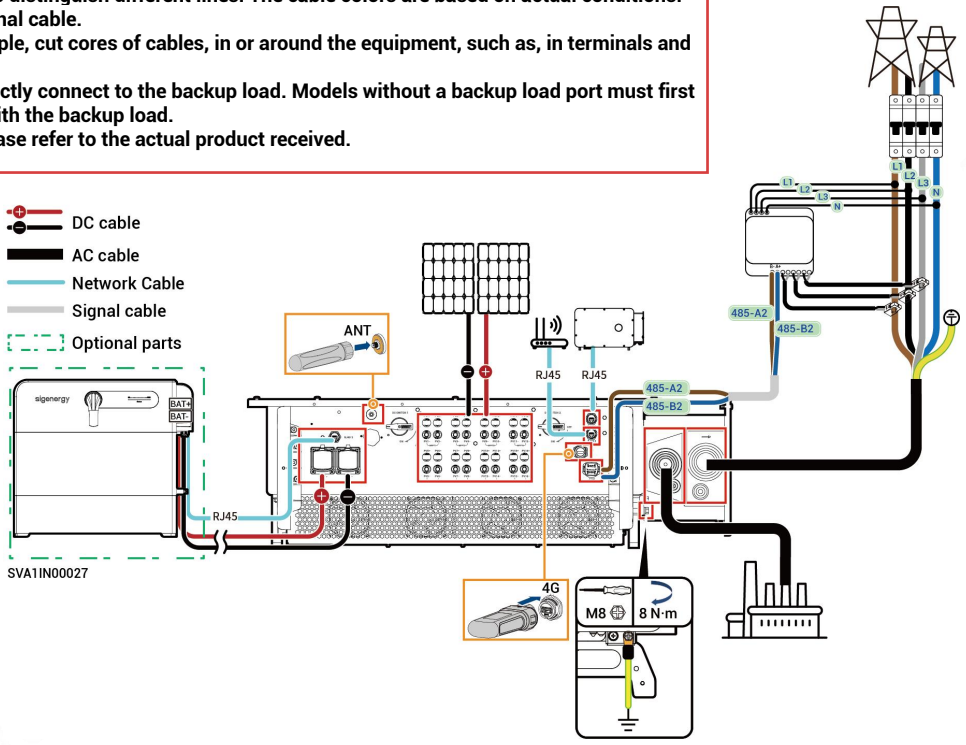

VIỆT NAM SOLAR
vietnamsolar.vn

Style 2

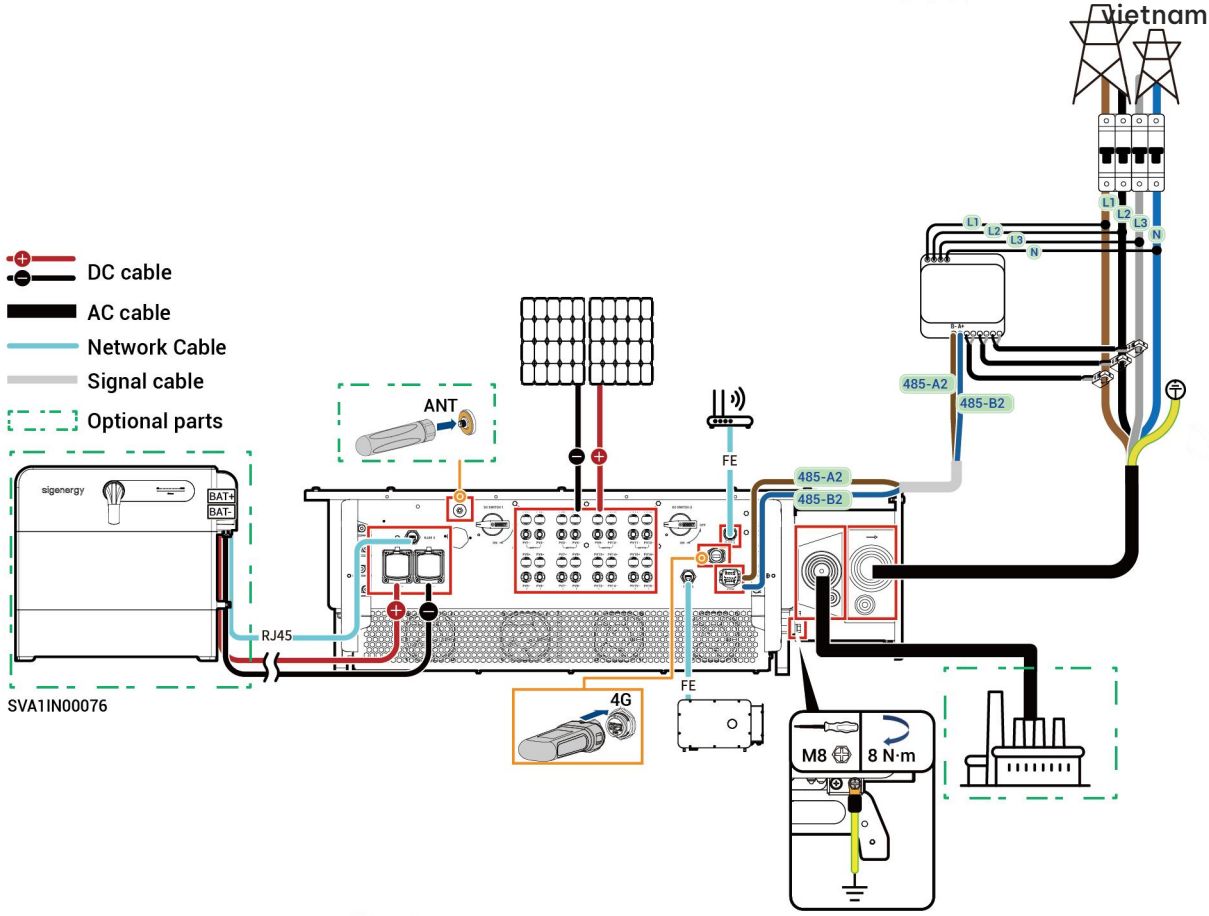

vietnamsolar.vn

5.2 Protective Ground Cable Connection

Tips

- It is suggested that the protective ground cable be connected to the grounding point of the chassis casing. The grounding point in the maintenance chamber is mainly used to connect the grounding cable included in the multi-core AC cable.
- When the wire diameter of the protective ground cable meets the requirement, you can choose either the grounding point on the chassis casing or the grounding point in the maintenance chamber.

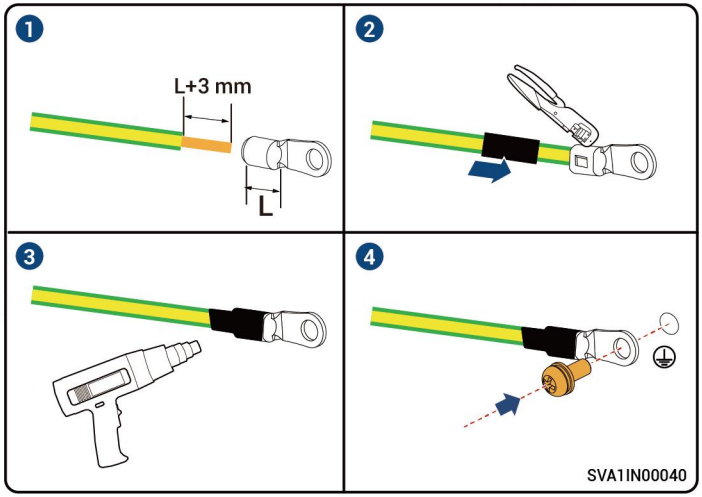

5.3 Removing AC Protective Door

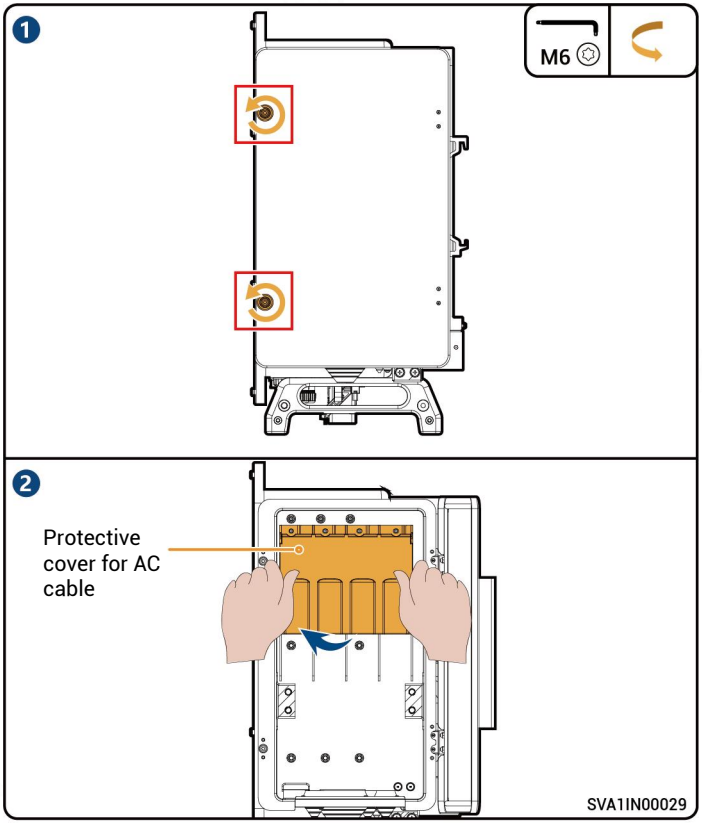

5.4 Connecting Backup Load (Multi-core AC output Cable)

Tips

This article takes five-core wire as an example to introduce the wiring steps. The wiring methods of three-core wire and four-core wire are the same as those of five-core wire.

Caution

- **Cut a routing hole of the appropriate size based on the cable diameter.**
- **Do not cut reserved routing holes to avoid the effect on ingress protection.**
- **Apply fire-proof sealant if the seal is damaged or sealing failure occurs after cables are routed.**

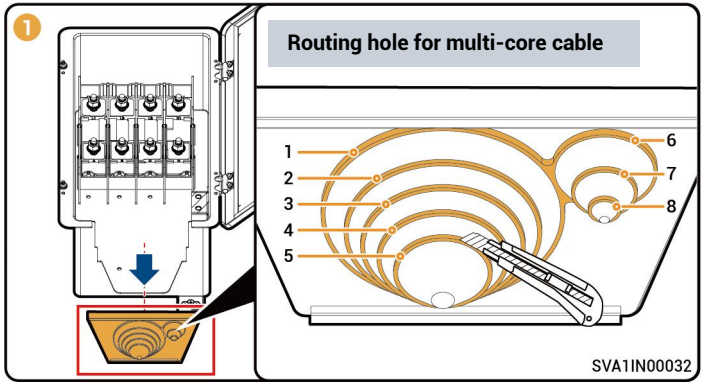

S/N	Routing hole Diameter	Cable OD	S/N	Routing hole Diameter	Cable OD
1	74 mm	-	6	32 mm	28-32 mm
2	60 mm	64-66mm	7	20 mm	21-28 mm
3	50 mm	55-64mm	8	10 mm	14-21 mm
4	40 mm	46-55mm			
5	30 mm	32-46mm			

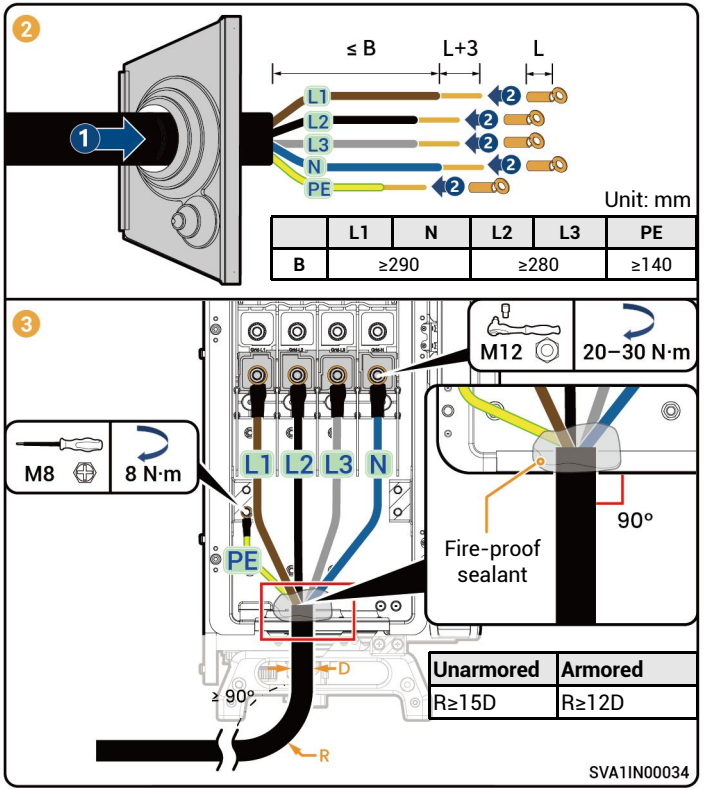

	L1	N	L2	L3	PE
B	≥290		≥280		≥140

5.5 Connecting Backup Load (Single core AC output Cable)

Tips

This article takes five-wire as an example to introduce the wiring steps. The wiring methods of three-wire and four-wire are the same as those of five-wire.

Caution

- **Cut a routing hole of the appropriate size based on the cable diameter.**
- **Do not cut reserved routing holes to avoid the effect on ingress protection.**
- **Apply fire-proof sealant if the seal is damaged or sealing failure occurs after cables are routed.**

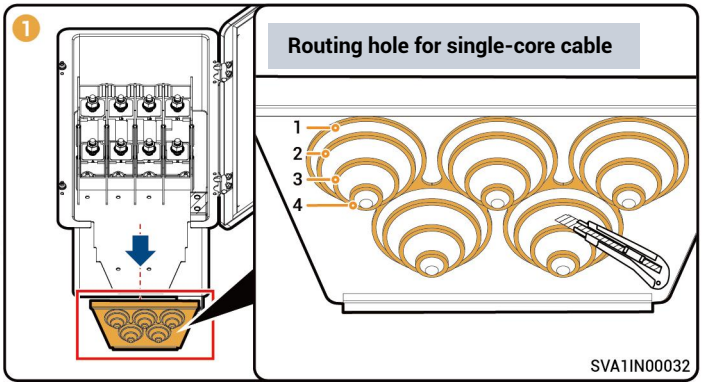

S/N	Routing hole Diameter	Cable OD
1	36.5 mm	-
2	30 mm	28-32 mm
3	20 mm	21-28 mm
4	10 mm	14-21 mm

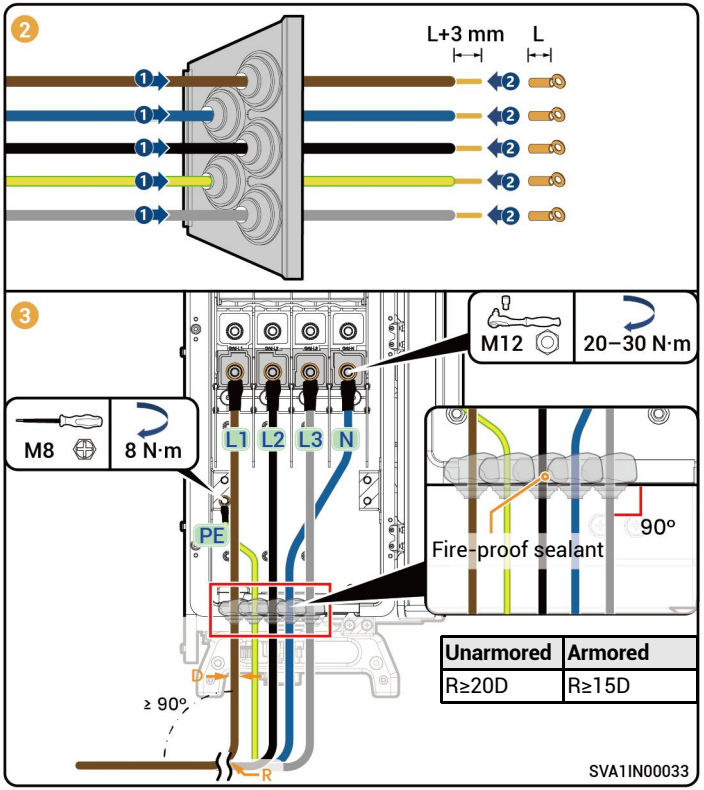

5.6 Connecting Grid (Multi-core AC output Cable)

Tips

This article takes five-wire as an example to introduce the wiring steps. The wiring methods of three-wire and four-wire are the same as those of five-wire.

Caution

- **Cut a routing hole of the appropriate size based on the cable diameter.**
- **Do not cut reserved routing holes to avoid the effect on ingress protection.**
- **Apply fire-proof sealant if the seal is damaged or sealing failure occurs after cables are routed.**

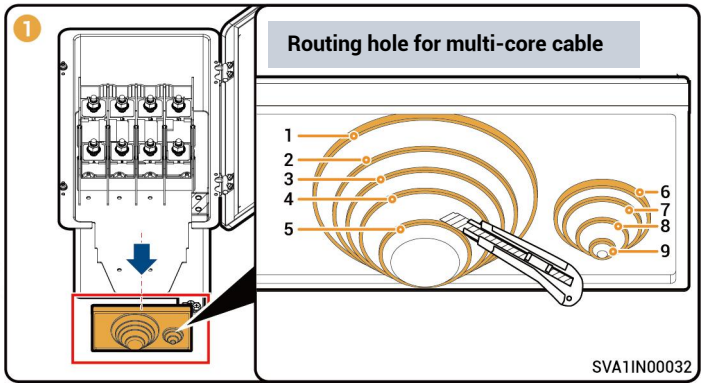

S/N	Routing hole Diameter	Cable OD	S/N	Routing hole Diameter	Cable OD
1	82 mm	83-90 mm	6	34 mm	35-42 mm
2	72 mm	73-80 mm	7	27 mm	28-35 mm
3	60 mm	61-68 mm	8	17 mm	18-25 mm
4	50 mm	51-68 mm	9	7 mm	8-15 mm
5	40 mm	41-48 mm			

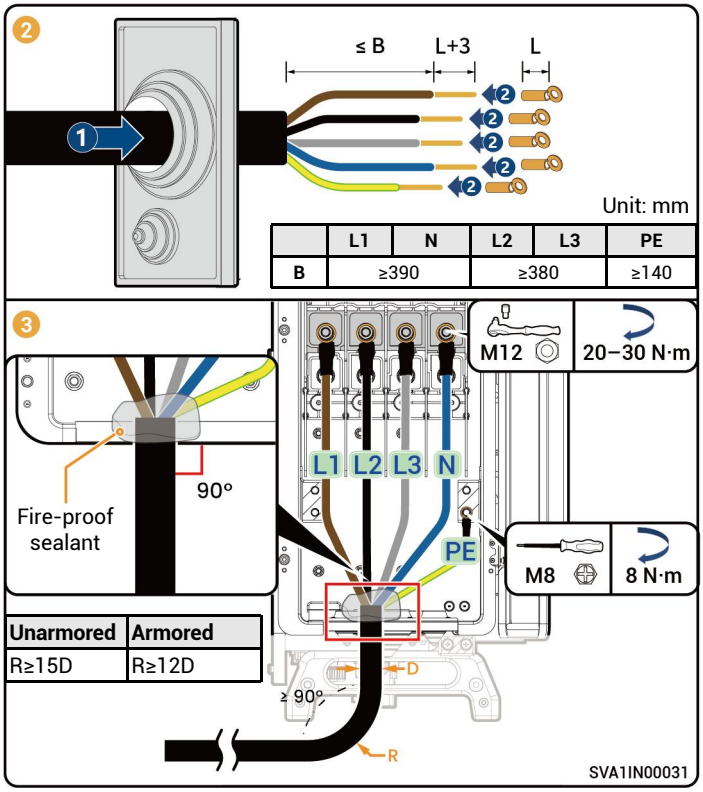

	L1	N	L2	L3	PE
B	≥390		≥380		≥140

Unarmored	Armored
R≥15D	R≥12D

5.7 Connecting Grid (Single core AC output Cable)

Tips

This article takes five-core wire as an example to introduce the wiring steps. The wiring methods of three-core wire and four-core wire are the same as those of five-core wire.

Caution

- **Cut a routing hole of the appropriate size based on the cable diameter.**
- **Do not cut reserved routing holes to avoid the effect on ingress protection.**
- **Apply fire-proof sealant if the seal is damaged or sealing failure occurs after cables are routed.**

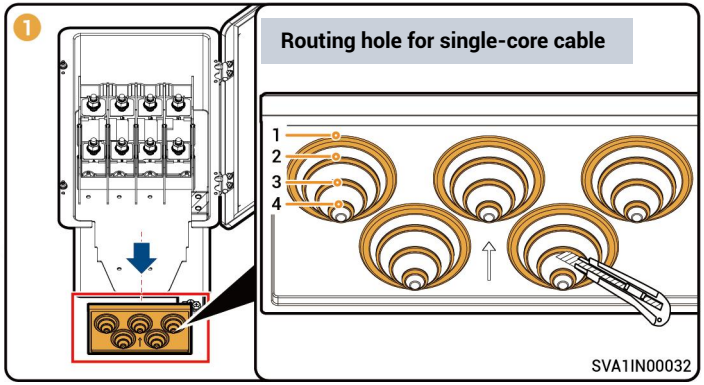

S/N	Routing hole Diameter	Cable OD
1	35 mm	36-43 mm
2	27 mm	28-35 mm
3	17 mm	18-25 mm
4	7 mm	8-15 mm

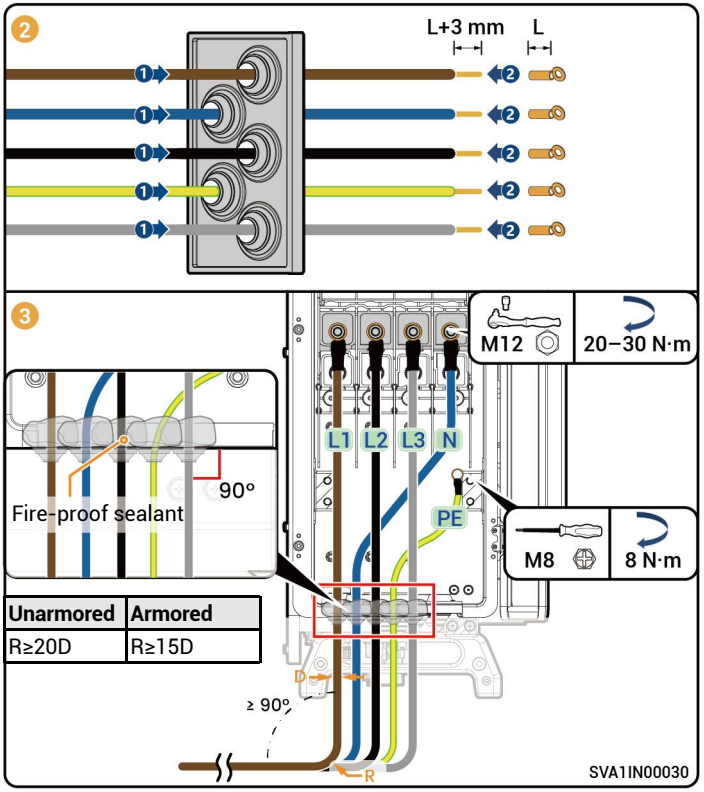

5.8 Installing AC Protective Door

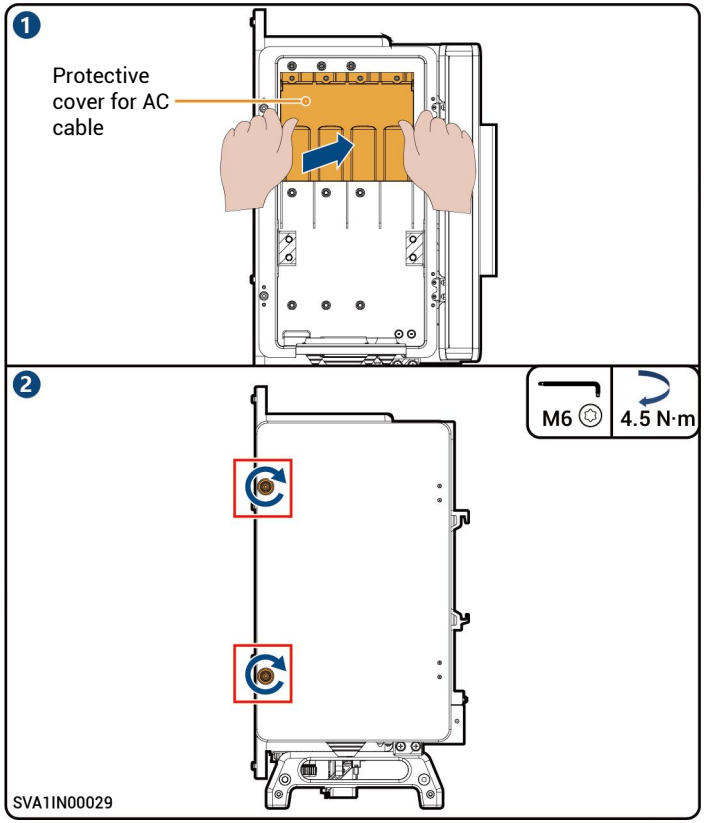

5.9 DC input cable Connection

Tips

- Before wiring, make sure that the circuit breaker on the PV side is not energized.
- Please use the PV connector supplied with the inverter. If it is accidentally lost or damaged, you need to purchase a PV connector of the same model. Do not use incompatible PV connectors.
- The positive or negative terminal of the PV string is short to the ground if the power distribution cables are not installed or routed in accordance with the requirements. As a result, the AC-DC short circuit may occur when the equipment is operating, resulting in equipment damage. The equipment damage caused by this is not covered under the equipment warranty.

1

Tips

- Before connecting the strings to the inverter, ensure that the insulation resistance to the ground of each string is normal.
- Test method: Use an insulation impedance tester to test the insulation resistance to the ground of the PV cable: Apply a DC voltage of more than 1000V between the PV cable and the ground to check the insulation resistance value.
  - If the insulation resistance is ≥ 1MΩ, it is normal.
  - If the insulation resistance is less than 1MΩ, you need to check the insulation problem of the cable/string.

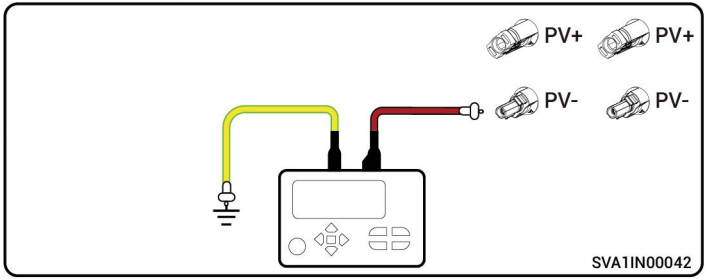

vietnamsolar.vn

2

Caution

- If the voltage is negative, the polarity is incorrect. Rectify the fault in time.
- If the voltage exceeds the maximum allowable voltage, please reduce the number of components in the string. (The maximum allowable voltage can be found on the inverter label.)

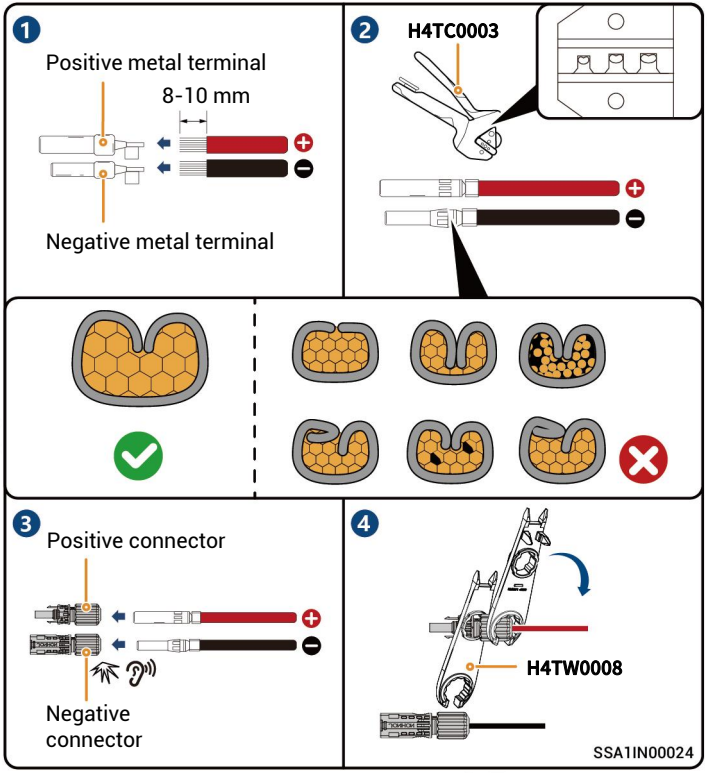

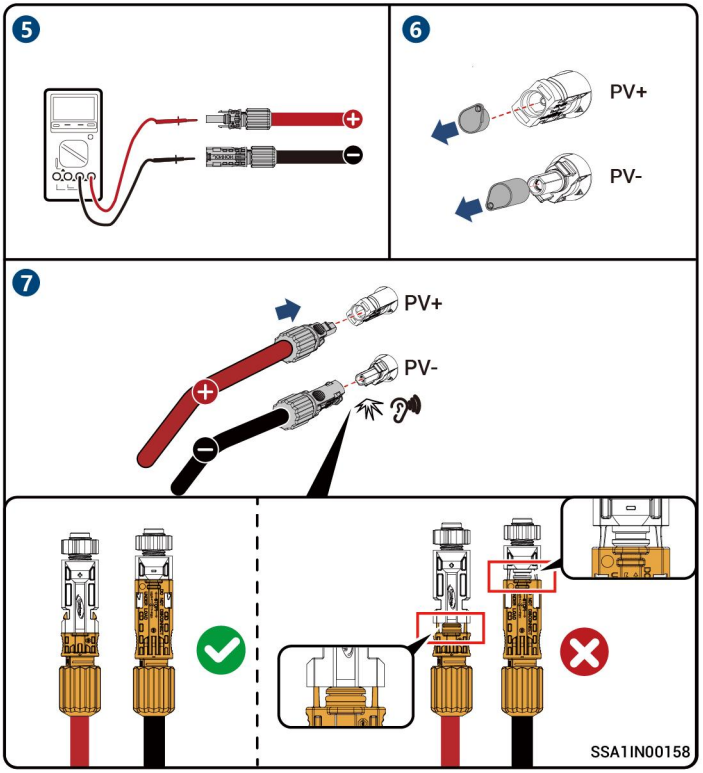

3

Caution

- **Please select the PV strings according to the table.**
- **PV strings connected to the same MPPT must use the same model and number of PV modules.**
- **The voltage difference between different MPPT channels must be < 125 V. The string configuration voltage should be higher than the lower limit of the full-load MPPT voltage.**

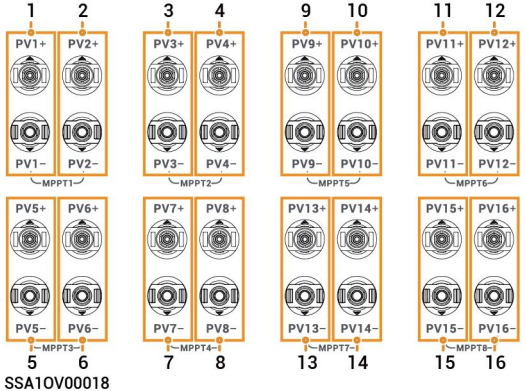

PV strings with all channels used

Product power range	PV string formation configuration
50 kW	Connected with 8 channels of strings (9, 10, 11, 12, 13, 14, 15, 16)
60 kW	Connected with 10 channels of strings (7, 8, 9, 10, 11, 12, 13, 14, 15, 16)
75/80 kW	Connected with 12 channels of strings (5, 6, 7, 8, 9, 10, 11, 12, 13, 14, 15, 16)
99.9/100/110 kW	Connected with 16 channels of strings (1, 2, 3, 4, 5, 6, 7, 8, 9, 10, 11, 12, 13, 14, 15, 16)

PV strings with partial channels used

Power range	Number of PV strings	Configuration of PV string
50 kW	1	Any one channel from 9 to 16
	2	12, 16
	3	10, 12, 16
	4	10, 12, 14, 16
	5	10, 12, 14, 15, 16
	6	9, 10, 12, 14, 15, 16
	7	9, 10, 11, 12, 14, 15, 16
	8	9, 10, 11, 12, 13, 14, 15, 16
60 kW	1	Any one channel from 9 to 16
	2	12, 16
	3	8, 12, 16
	4	8, 10, 12, 16
	5	10, 12, 14, 15, 16
	6	8, 10, 12, 13, 14, 15, 16
	7	7, 8, 10, 12, 13, 14, 15, 16
	8	7, 8, 10, 11, 12, 13, 14, 15, 16
	9	7, 8, 9, 10, 11, 12, 13, 14, 15, 16

Power range	Number of PV strings	Configuration of PV string
80 kW	1	Any one channel from 9 to 16
	2	12, 16
	3	8, 12, 16
	4	6, 8, 12, 16
	5	6, 8, 12, 14, 16
	6	6, 8, 10, 12, 14, 16
	7	6, 8, 10, 12, 14, 15, 16
	8	5, 6, 8, 10, 12, 14, 15, 16
	9	5, 6, 8, 9, 10, 12, 14, 15, 16
	10	5, 6, 8, 9, 10, 12, 13, 14, 15, 16
	11	5, 6, 7, 8, 9, 10, 12, 13, 14, 15, 16
	12	5, 6, 7, 8, 9, 10, 11, 12, 13, 14, 15, 16
99.9/100/110 kW	1	Any one channel from 9 to 16
	2	12, 16
	3	8, 12, 16
	4	4, 8, 12, 16
	5	4, 8, 12, 14, 16
	6	4, 8, 10, 12, 14, 16
	7	4, 6, 8, 10, 12, 14, 16
	8	2, 4, 6, 8, 10, 12, 14, 16
	9	2, 4, 6, 8, 10, 12, 14, 15, 16
	10	2, 3, 4, 6, 8, 10, 12, 14, 15, 16
	11	2, 3, 4, 6, 8, 10, 12, 13, 14, 15, 16
	12	2, 3, 4, 5, 6, 8, 10, 12, 13, 14, 15, 16
	13	2, 3, 4, 5, 6, 8, 10, 11, 12, 13, 14, 15, 16
	14	2, 3, 4, 5, 6, 7, 8, 10, 11, 12, 13, 14, 15, 16
	15	2, 3, 4, 5, 6, 7, 8, 9, 10, 11, 12, 13, 14, 15, 16
	16	1, 2, 3, 4, 5, 6, 7, 8, 9, 10, 11, 12, 13, 14, 15, 16

DC cable bending requirements

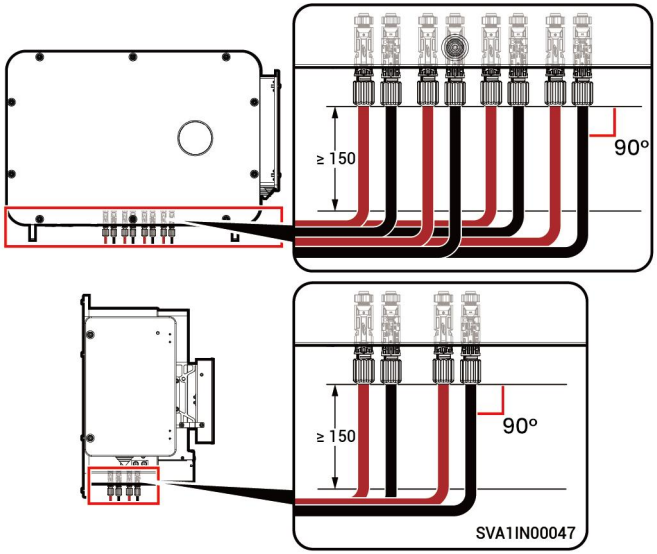

5.10 Signal cable Connection

Tips

- **The power sensor needs to be purchased from our company's official channels.**
- **The appearance and specific wiring of the power sensor can be found in the instruction manual delivered with the case.**

5.10.1 COM terminal introduction

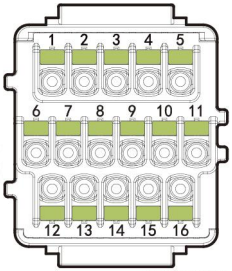

SSA1IN00020

Function description	Pin Definition		Pin Number	Sigen Sensor TP-CT300-DH (SDM630MCT 40mA/300A)	Sigen Sensor TP-CT600-DH (SDM630MCT V2/600A)	Sigen Sensor TPX-CH (DTSU666)
(Reserved) Supports a maximum signal voltage of 12 V and a signal current of 1 A. Connected to third party intelligent electric equipment, such as switch control and heat pump.	DO1-COM	Dry contact 1-Common	1	–	–	–
	DO1-NO	Dry contact 1-Normal Open	2	–	–	–
(Reserved) DO2, Used to connect the generator.	DO2-COM	Dry contact 2-Common	3			
	DO2-NO	Dry contact 2-Normal Open	4			
	DO1-NC	Dry contact 2-Normal Close	11			
For power scheduling, such as DRM and Ripple control Receiver (RCR).	DI1	Digital input 1	5	–	–	–
	DI2	Digital input 2	6	–	–	–
	DI3	Digital input 3	7	–	–	–
	DI4	Digital input 4	8	–	–	–
-	GND	Signal GND	10	–	–	–
Used to connect the rapid shutdown DI interface as the signal cable port for the NS protection device, Emergency power off button (EPO).	DI5	Digital input 5	9	–	–	–
RS485-2, Used to access the grid side power sensor.	RS485B2	**RS485 signal 2_B–**	**13**	**13**	**13**	**25**
	RS485A2	**RS485 signal 2_A+**	**14**	**14**	**14**	**24**
RS485-1, Custom port. Used to connect Meteorological Station, a third-party EMS controller and so on.	PE	PE signal shielding ground	12	–	–	–
	RS485A1	RS485 signal 1_A+	15	–	–	–
	RS485B1	RS485 signal 1_B–	16	–	–	–

VIỆT NAM SOLAR
vietnamsolar.vn

5.10.2 RS485 Signal Cable Connection

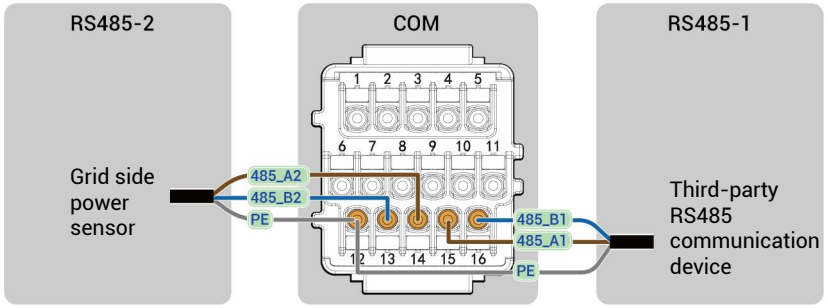

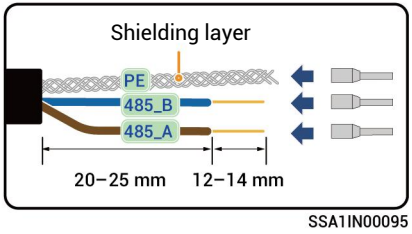

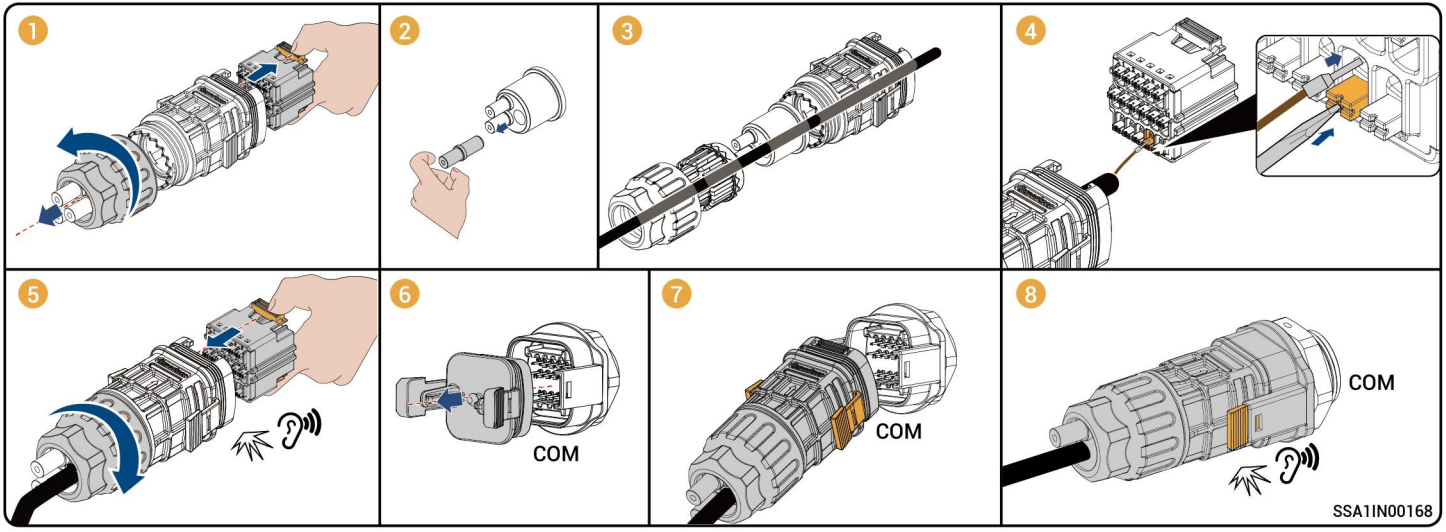

VIỆT NAM SOLAR
vietnamsolar.vn

5.10.3 (Optional) Grid Scheduling Signal Cable Connection (taking RCR as an example)

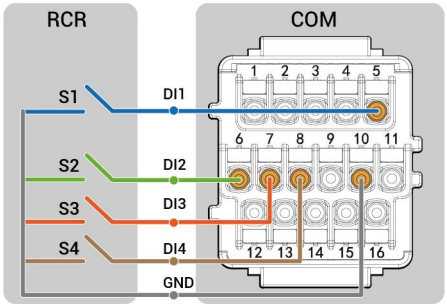

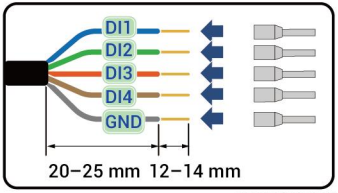

SSA1IN00099

Tips

After creating new systems, you can use the mySigen App to set the parameters for Active Dry Contact scheduling or Reactive Dry Contact scheduling. For specific operation steps, please refer to Grid scheduling in *mySigen App Installer Manual*.

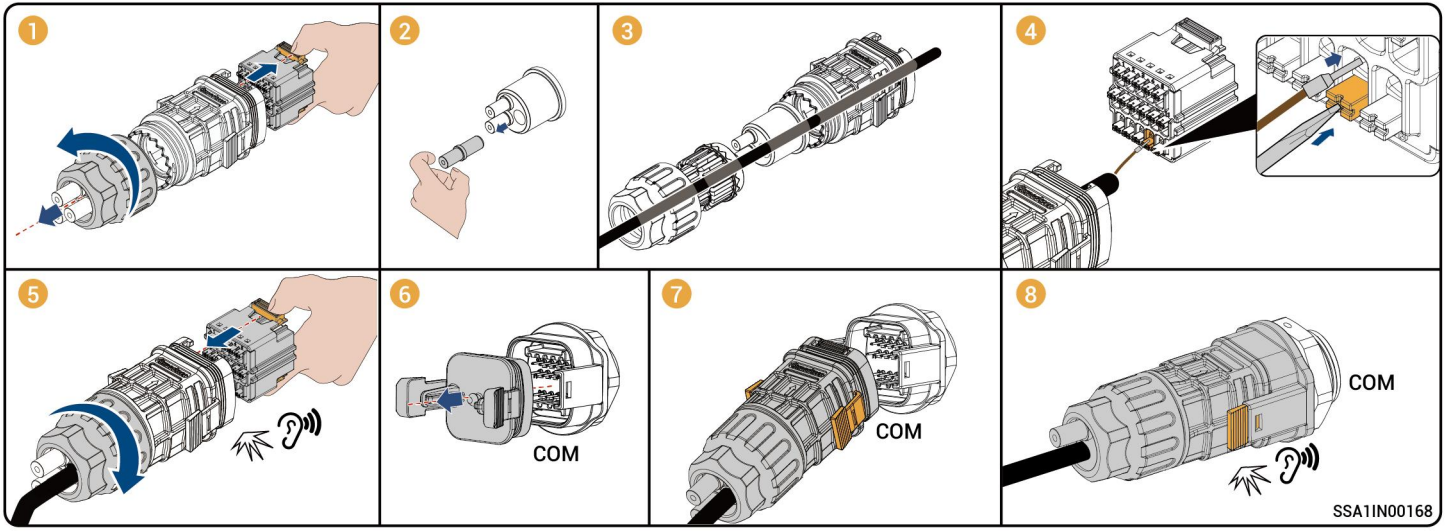

5.10.4 (Optional) NS Protection Signal Cable Connection

Tips

- If DI1, DI2, DI3, DI4, DI5 and GND are not connected to other devices, the NS protection device can be connected.
- DI1, DI2, DI3, DI4, DI5 and GND use the same method to connect the NS protection device. This section uses DI5 and GND as an example.
- When the NS protection switch is turned on and, the NS protection function is triggered, the inverter automatically shuts down.
- When the NS protection switch is turned off, and the NS protection function is not enabled, the inverter must be manually shut down.
- The rapid shutdown device and the NS protection device use the same DI and GND. Either one of them can be selected.

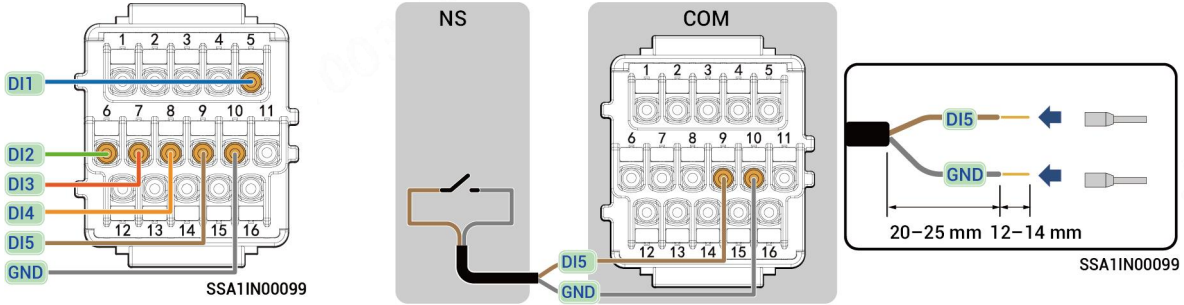

VIỆT NAM SOLAR
vietnamsolar.vn

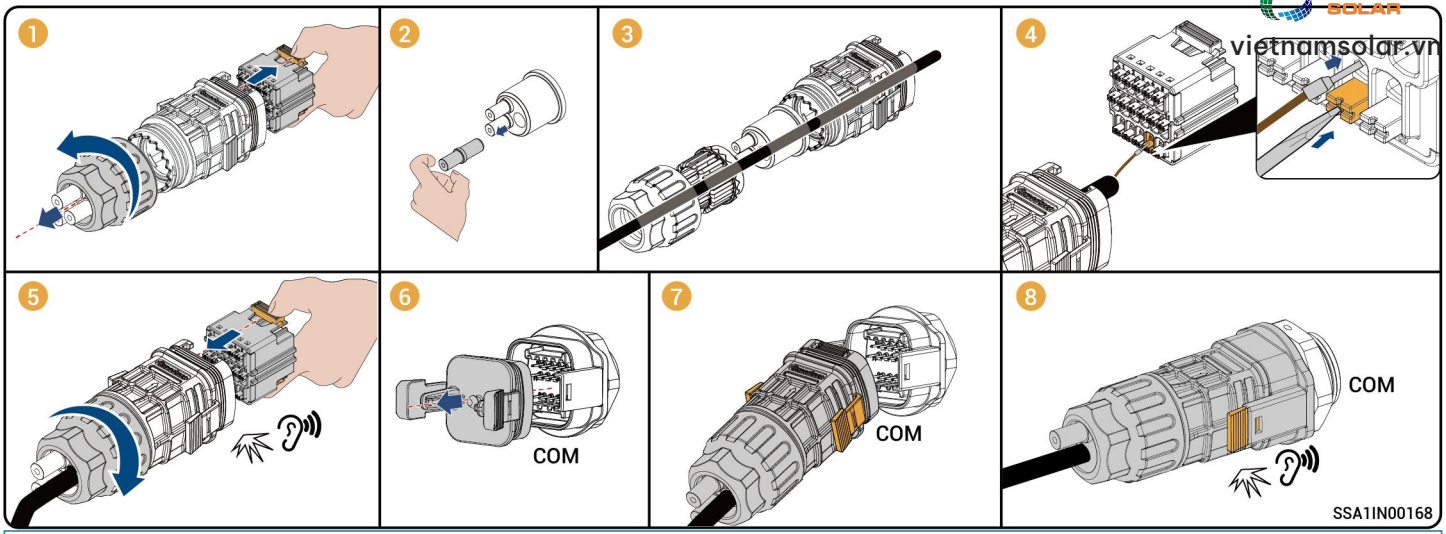

Tips

After creating new systems, you can use mySigen App to set NS protection parameters. For detailed operating procedures, please refer to the DI customization chapter in the *mySigen App Installer Manual*.

5.10.5 (Optional) Connection of Emergency Power Off (EPO) Button

Tips

- If DI1, DI2, DI3, DI4, DI5 and GND are not connected to other devices, an emergency power off (EPO) button can be connected.
- The connection method for the emergency power off button to DI1, DI2, DI3, DI4, DI5 and GND is the same. This section uses DI5 and GND as an example.
- To prevent misoperations, the EPO button must have a protective cover, and the connecting cables must be protected with conduits.

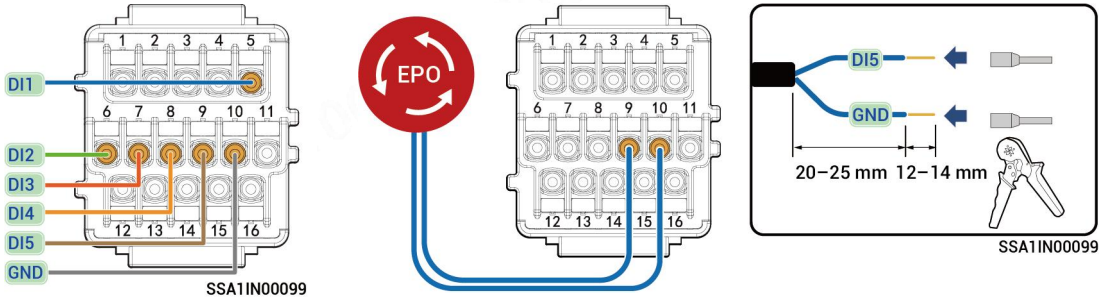

VIỆT NAM SOLAR
vietnamsolar.vn

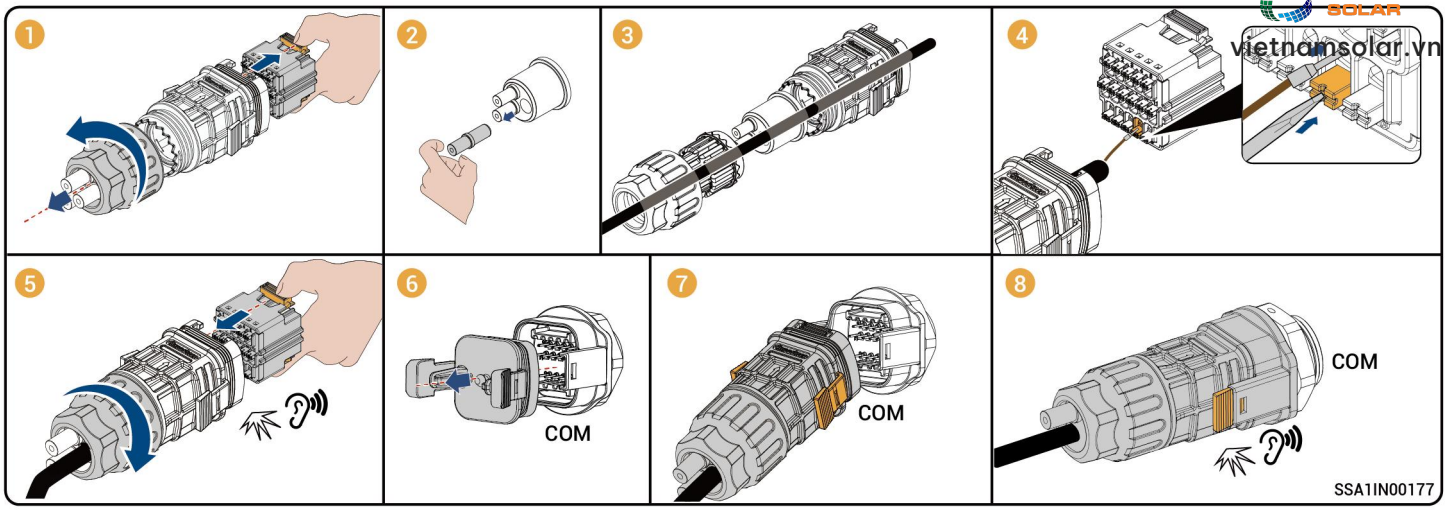

Tips

After creating new systems, you can use mySigen App to set EPO protection parameters. For detailed operating procedures, please refer to the DI customization chapter in the *mySigen App Installer Manual*.

vietnamsolar.vn

5.11 (Optional) Replacing SIM card of Sigen CommMod

Tips

- When free 4G traffic of CommMod runs out, users must replace an SIM card.
- Please replace the SIM card in Sigen CommMod with a SIM card of your country or region.Recommended data plan: ≥ 25 MB/month x N. (Wherein, N is the number of inverters)
- If you hear only one click sound when assembling Sigen CommMod in Step 3 , complete the assembly on the other side.

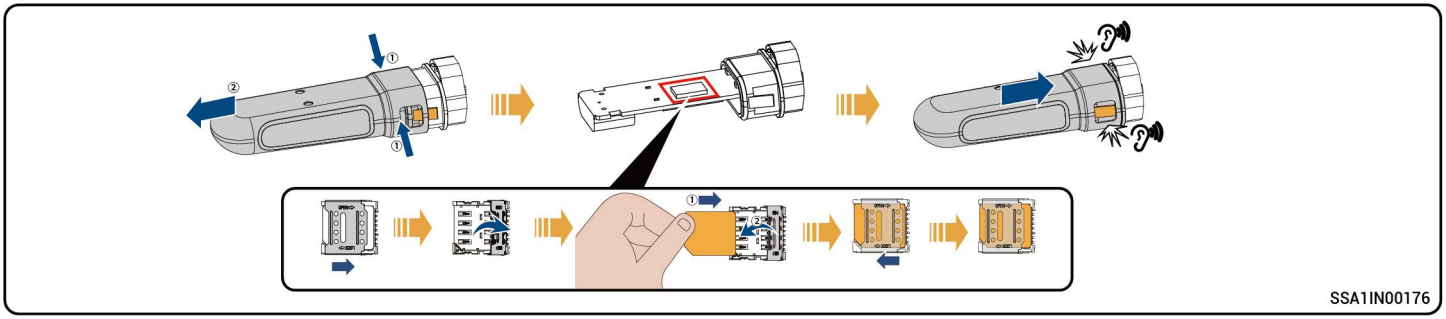

5.12 Sigen CommMod Installation

Tips

Sigen CommMod is required for 4G communication.

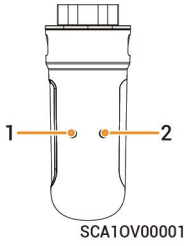

S/N	Indicator	Description
1	Power indicator	-
2	Network state indicator	• Slow flashing(200 ms on/1800 ms off): The network is being connected • Slow flashing(1800 ms on/200 ms off): Standby • Quick flashing(125 ms on/125 ms off): Data is being transferred

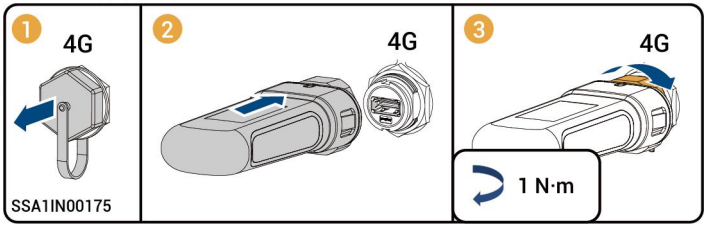

5.13 RJ45 Cable Connection

Tips

- RJ45 cables are EIA/TIA 568B standard cables.
- Two RJ45 Ethernet ports, one is connected to the router, and the other is connected to other equipment.(e.g., inverter, Gateway etc.)

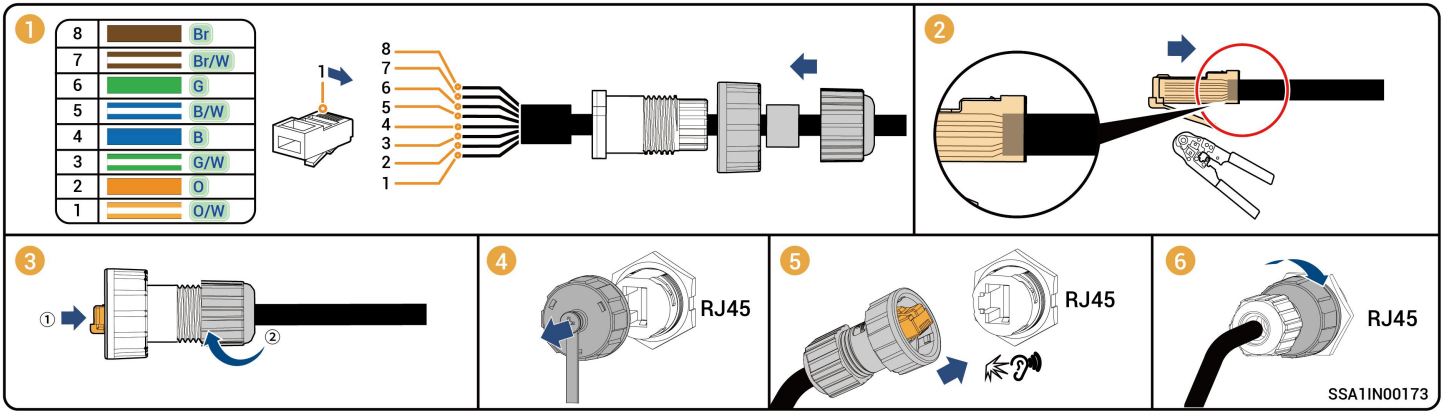

5.14 WLAN antenna stick Installation

Tips

- WLAN communication requires the installation of WLAN antenna stick.
- To ensure good communication, tighten the antenna rod up clockwise. The antenna rod is tightened up when it cannot be easily turned counterclockwise.

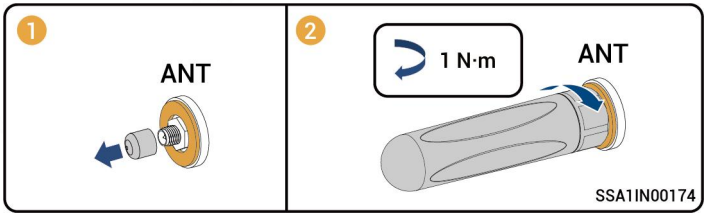

vietnamsolar.vn

5.15 (Optional) SigenStack DC Cable Connection

Tips

- **This step is required if SigenStack is configured. If SigenStack is not configured, this step can be ignored.**
- **For detailed operations on SigenStack, please refer to the corresponding model's Installation Guide.**

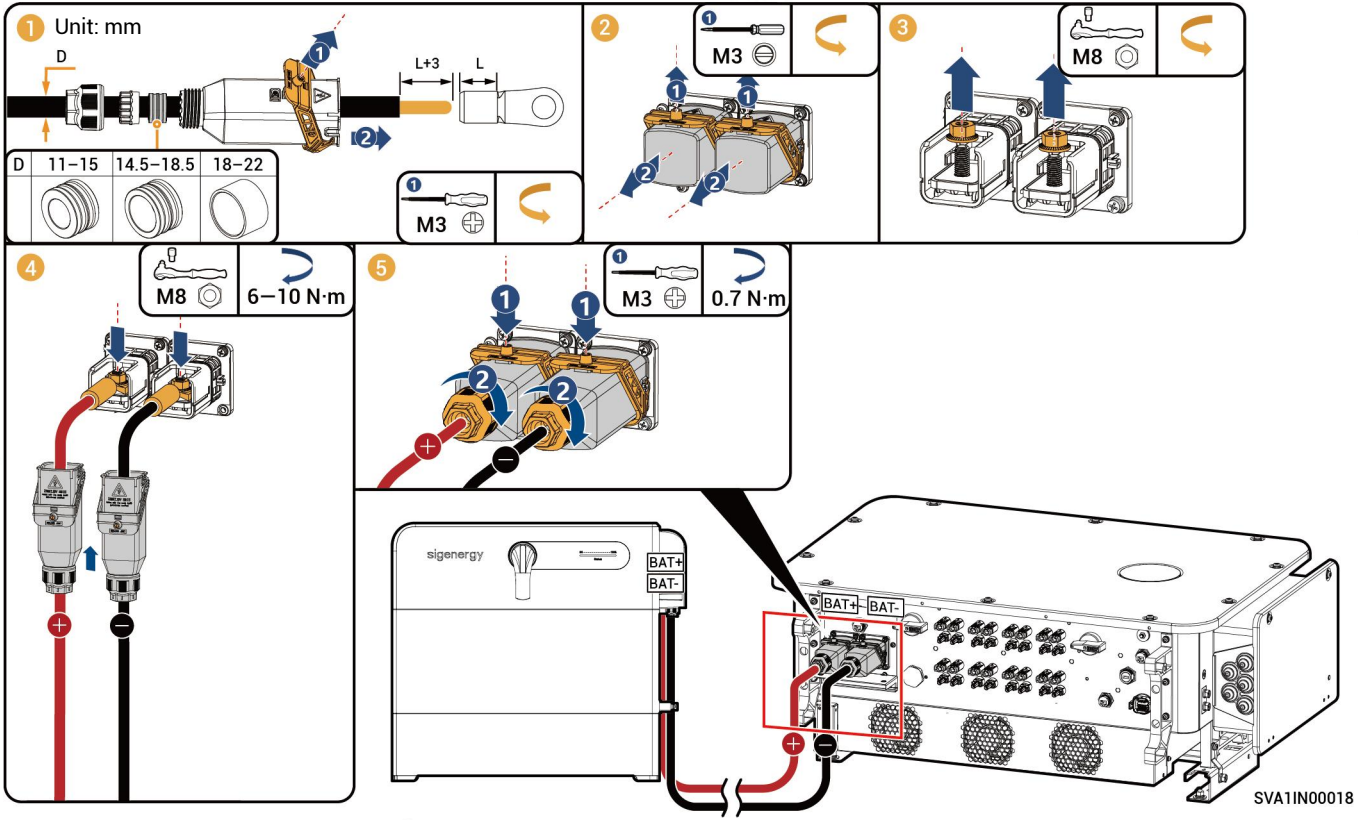

5.16 (Optional) SigenStack Network Cable Connection

Tips

- **This step is required if SigenStack is configured. If SigenStack is not configured, this step can be ignored.**
- **For detailed operations on SigenStack, please refer to the corresponding model's Installation Guide.**

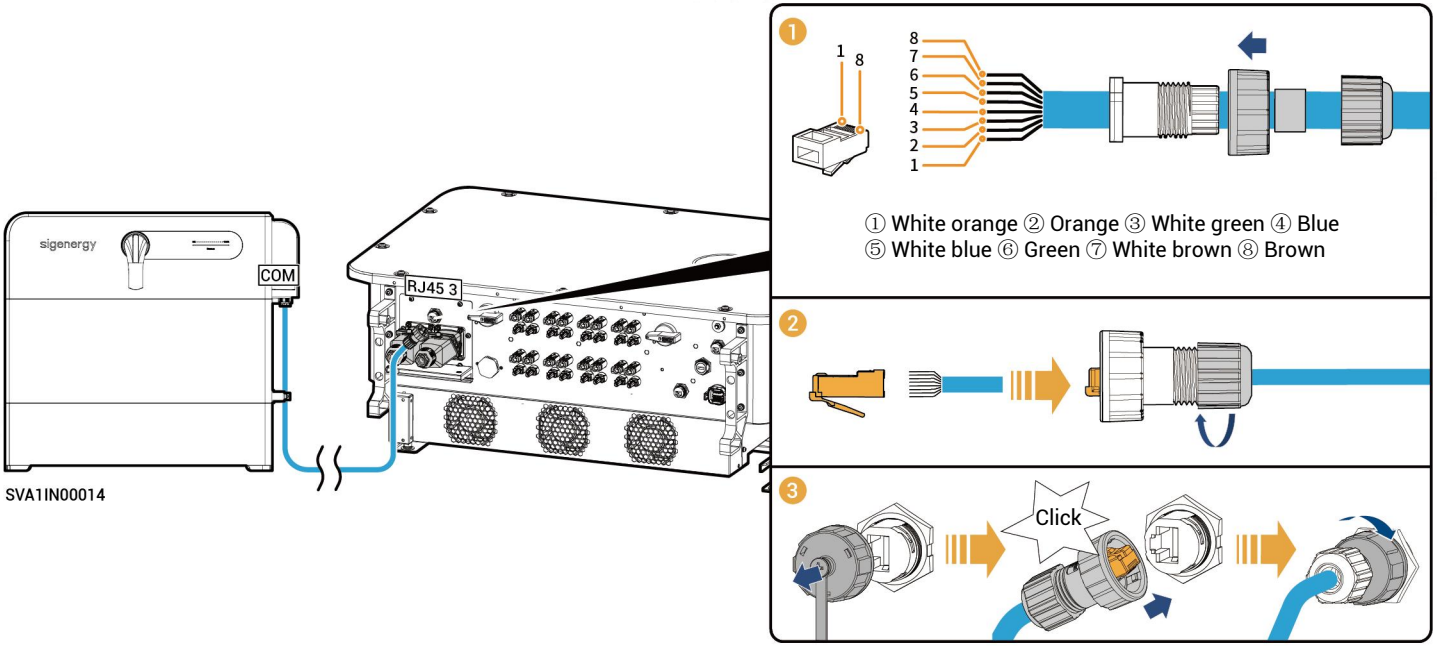

6 Post-installation Check

S/N	Check Item
1	The equipment has been securely installed.
2	Ground cables, DC cables, signal cables, etc. are installed accurately without leftovers.
3	The cable fastening screws or terminals are properly installed.
4	There are no sharp spikes or acute angles at the cut point of the cable tie.
5	DC SWICH is in the OFF state.
6	Ports that are not in use have waterproof covers or plugs installed.
7	There is no construction left inside or outside the equipment.

7 Equipment Power-On

1. **Turn on the upstream switch of equipment.**
2. **Rotate DC SWITCH to ON.**
3. **Observe the indicators on the front side of the inverter to learn about the equipment status.**

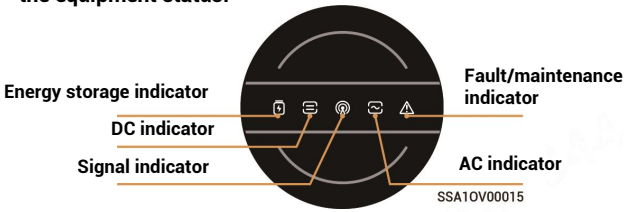

Indicator	Color	State	Description
		-	All SigenStacks lie dormant.
		Breathing blink	All SigenStacks are connected but not running.
		Always on	SigenStack neither charges nor discharges.
		Flash	SigenStack is charging.
		Flash	SigenStack is discharging.
		Always on	SigenStack disconnected.
		Always on	Some SigenStacks are faulty.
		-	The DC side is not connected.
		Always on	The DC side is connected but not running.
		Always on	The DC side is running.
		Flash	The DC side is faulty.
		Always on	The inverter is faulty.

Indicator	Color	State	Description
		-	The AC side is not connected.
		Always on	The AC side is connected but not running.
		Always on	Grid-connected operation.
		Always on	Off-grid operation.
		Flash	Off-grid overload operation.
		Flash	The AC side is faulty.
		Always on	The inverter is faulty.
		Always on	Bypass mode. The grid supplies power to the load.
		-	The management system is not connected.
		Flash	App connects to the device hotspot.
		Always on	Connected to the management system using an FE or WLAN.
		Always on	Connected to the management system over 4G.
		Flash	Insufficient traffic for Sigen CommMod.
		Flash	Network port 1/2 failure.
		Always on	Proximity password reset in progress.
		-	No alarms and no local maintenance operations.

8 Download and create new system for mySigen APP

1 **Please enter the "Partner" → "Register Now" at the Company's official website (https://www.sigenergy.com), and complete the account registration based on facts.**

2 **Download the mySigen App and create new system for the device.**

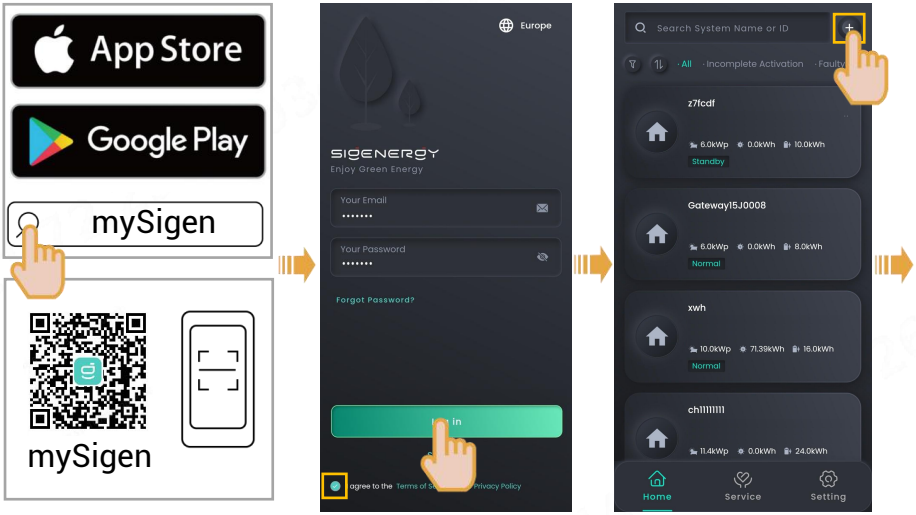

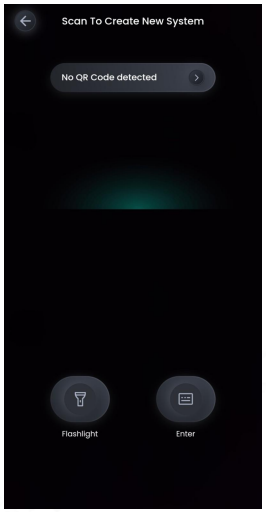

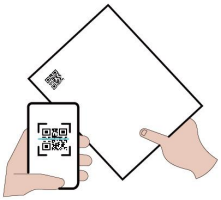

or

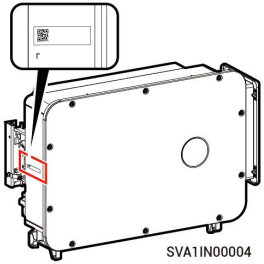

According to the interface prompts, complete the startup or refer to the "mySigen App Creating New Systems Guide" to obtain the operation method of startup.

Scan the SN code label on the accompanying box material. If the SN is lost, scan the SN on the side of the inverter.

3 **Upon completion of the new system creation, the installer shall inform the owner to check its "sigencloud" e–mail within 24 hours and proceed with activating its account.**

Sigenergy Technology Co., Ltd.

Website | LinkedIn | YouTube

www.sigenergy.com

Copyright © Sigenergy Technology Co., Ltd. 2026. All rights reserved.

Description in this document may contain predictive statements regarding financial and operating results, product portfolio, new technology, configurations and features of product. Several factors could cause difference between actual results and those expressed or implied in the predictive statements. Therefore, description in this document is provided for reference purpose only and constitutes neither an offer nor an acceptance. Sigenergy Technology Co., Ltd. may change the information at any time without notice.